Stepnet ST3-055-04

RoHS

Control Modes
- Position [Microstepping]
- Indexer, Point-to-Point, PVT

Command Interface
- CANopen
- ASCII and discrete I/O

Communications
- CANopen
- RS-232

I/O
- Digital: 15 inputs, 6 outputs
- Analog: 3 inputs, ±10V

Dimensions: mm [in]
- 121 x 70 x 27 [4.75 x 2.75 x 1.08]

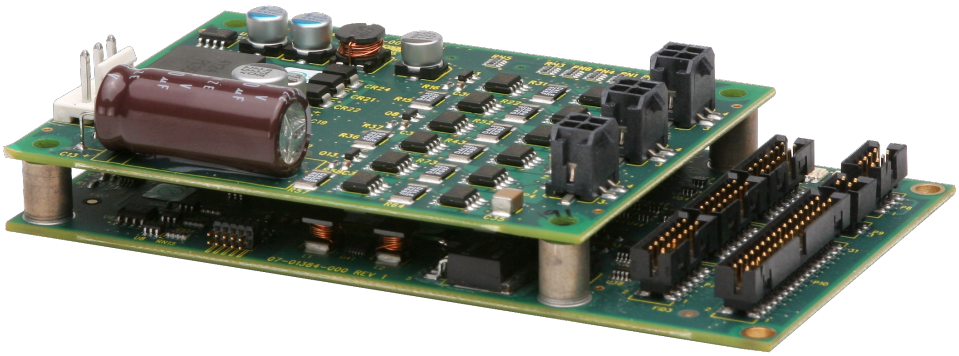

Model	Ic	Ip	Vdc
ST3-055-04	2	4	18~55

Ip, Ic are per axis

DESCRIPTION

Stepnet ST3-055-04 puts three stepper motor drivers in a 13 in^2 package that combines CANopen networking with 100% digital control of stepper motors. Each axis is programmable with a unique CAN node address which is stored in flash memory. Power output is compatible with most NEMA 17 and 23 size stepper motors. The small footprint is well-suited for desktop instrumentation and enables motor drive, interface, and control circuits to be combined on a single PC board.

Set up is fast and simple using CME 2™ software operating under Windows® and communicating with Stepnet ST3-055-04 via an RS-232 link. CAN address selection is programmed into driver flash memory.

As a CANopen node Stepnet ST3-055-04 operates as a Motion Control Device under the DSP-402 protocol of the CANopen DS-301 V4.01 (EN 50325-4) application layer. DSP-402 modes supported include: Profile Position, Interpolated Position (PVT), and Homing.

Profile Position Mode does a complete motion index on command with S-curve acceleration & deceleration, top speed, and distance programmable. In PVT mode, the controller sends out a sequence of points each of which is an increment of a larger, more complex move than that of a single index or profile.

Digital logic inputs are programmable as limit & home switches, stepper pulse inputs, A/B master encoder, reset, motion abort, or motor over-temperature. There are six programmable logic outputs for reporting a driver fault, or other status indications. When operating as a CAN node, inputs and outputs can be used as general-purpose I/O with no link to amplifier functions.

An Aux HV input is provided for "keep alive" power that preserves the driver data (e.g. current position) and CANopen operation if +HV has been removed as in an emergency-stop situation. This enables the control system to monitor drive status and to enable an orderly recovery without a full system reset, and "homing" of all axes.

Operation from transformer-isolated DC power supplies saves cost in multi-axis systems.

GENERAL SPECIFICATIONS

Test conditions: Load = 2 mH in series with 1 Ω per phase, ambient temperature = 25 °C. +HV = HV_{max}

MODEL	ST3-055-04	
OUTPUT POWER (PER AXIS)		
Peak Current	4 (2.8)	Apeak (Arms, sinusoidal), ±5%
Peak time	1	s, ±5%
Output power	100	W
Continuous current	2 (1.4)	Apeak (Arms, sinusoidal)
INPUT POWER		
HVmin to HVmax	+18 to +55	Vdc, transformer-isolated
Ipeak	8	Adc (1 sec)
Aux HV	+18 to +55	Vdc @ 300 mA max
CURRENT CONTROL		
Current loop update rate	15 kHz (66.7 µs)	
PWM outputs	Dual MOSFET H-bridges, 15 kHz center-weighted PWM, space-vector modulation	
PWM ripple frequency	30 kHz	
HV Compensation	Changes in HV do not affect current-loop bandwidth	
Commutation	Open-loop microstepping	
Minimum inductance	200 µH per phase	
COMMAND INPUTS		
CANopen bus control	Operating Modes	Profile Position, Interpolated Position(PVT), and Homing
Digital position reference (Note 1)	Pls/Dir, CW/CCW	Stepper commands (2 MHz maximum rate)
		Quad A/B Encoder 2 Mline/sec, (8 Mcount/sec after quadrature)
DIGITAL INPUTS		
Number	15	
Type [IN1~12]:	High-Speed Inputs with 1 µs RC filters, programmable functions and active levels [IN13~15]: Motor temperature switch (see below under Motor Connections)	
Inputs [IN1~12]	74HC14 Schmitt trigger operating from +5.0 V with RC filter on input, 10 kΩ pull-up to +5 Vdc RC time-constants assume active drive on inputs and do not include 10 kΩ pull-ups.	
Logic levels	Vin-LO < +1.35 Vdc, Vin-HI > +3.65 Vdc, Maximum input voltage = +30 Vdc	
Update rate	5 kHz (200 µs period)	
ANALOG INPUTS		
Number	3	
Type	Differential, ±10 Vdc, 5 kΩ input impedance	
DIGITAL OUTPUTS		
Number	6	
Type	Current-sinking MOSFET open-drain outputs with 1 kΩ pullup to +5 Vdc through diode, 250 mAdc sink max, +30 Vdc max	
Vout LO	<0.1 Vdc @ 250 mA	
Functions	Programmable	
Active Level	Programmable to either HI (off, pull-up to +5 Vdc) or LO (on, current-sinking) when output is active	
DC POWER OUTPUT		
+5 Vdc ±2%	750 mA max, 250 mA max per axis typical The +5 Vdc supply connects to feedback connectors J5, J6, & J7 and control connector J10 The sum of currents for all connections cannot exceed 750 mA	
RS-232 PORT		
Signals	RxD, TxD, Gnd	
Mode	Full-duplex, DTE communication port for amplifier setup and control, 9,600 to 115,200 baud 8 data-bits, no parity, 1 stop-bit	
Protocol	Binary format, proprietary or ASCII	
CANOPEN COMMUNICATION PORT		
Signals	CAN_H, CAN_L, CAN_GND optically isolated from drive circuits	
Terminator	Internal, 121 Ω, enabled by connecting pins 7~8 of J8	
Speed	1 Mbit/sec maximum, programmable	
Indicators	LED, red/green as per CANopen Indicator Specification CIA DR-303-3	
Address Selection	Software programmable, three CAN addresses (nodes) per driver (one per axis)	
Protocol	CANopen Application Layer DS-301 V4.01	
Device	DSP-402 Device Profile for Drives and Motion Control	
LED DISPLAYS		
Number	3	
Color	Bi-color (red-green)	
Function	Color and solid/flashing patterns indicate the drive status of each axis	
MOTOR CONNECTIONS		
Motor A+,A-,B+,B-	Outputs to 2-phase stepper motor, bipolar drive connected	
Motemp	Axis 1: [IN13], Axis 2: [IN14], Axis 3: [IN15], 4.99 kΩ pull-up to +5 Vdc 33 µs RC filter assumes active drive on inputs and does not include 4.99 kΩ pull-ups. Vin-LO < +1.35 Vdc, Vin-HI > +3.65 Vdc, Maximum input voltage = +20 Vdc 5 kHz (200 µs period) update rate	
Encoder	Digital, quad A/B/X, differential, 121Ω terminating resistors across complementary inputs	

PROTECTIONS

HV Overvoltage	> +55 Vdc (±1 Vdc)	Driver outputs turn off until +HV is < +55 Vdc (±1 Vdc)
HV Undervoltage	< +18 Vdc (±1 Vdc)	Driver outputs turn off until +HV >= +18 Vdc (±1 Vdc)
Driver over temperature	PC Board > 90 °C.	Driver latches OFF until driver is reset, or powered off-on
Short circuits		Output to output, output to ground, internal PWM bridge faults
I2T Current limiting		Programmable: continuous current, peak current, peak time
Motor over temperature		Motor outputs are disabled when Motemp inputs are active
Latching / Non-Latching		Programmable

MECHANICAL & ENVIRONMENTAL

Size	121 x 70 x 27 [4.75 x 2.75 x 1.08] mm[in]
Weight	
Ambient temperature	0 to +45 °C operating, -40 to +85 °C storage
Humidity	0 to 95%, non-condensing
Contaminants	Pollution degree 2
Environment	IEC68-2: 1990
Shock	15 g peak for 11 ms duration
Vibration	0.075 mm peak, sinusoidal, 10~55 Hz
Cooling	Convection in open air for rated output currents and power. Forced-air may be required when mounted in confined space.

AGENCY CONFORMANCE

EN 55011 : 1998	CISPR 11 (1997) Edition 2/Amendment 2: Limits and Methods of Measurement of Radio Disturbance Characteristics of Industrial, Scientific, and Medical (ISM) Radio Frequency Equipment
EN 61000-6-1 : 2001	Electromagnetic Compatibility Generic Immunity Requirements
Following the provisions of EC Directive 89/336/EEC:	
EN 60204-1: 1997	Safety of Machinery. Electrical Equipment of Machines
Following the provisions of EC Directive 98/37/EC:	
UL 508C : 1996	UL Standard for Safety for Power Conversion Equipment

DIMENSIONS

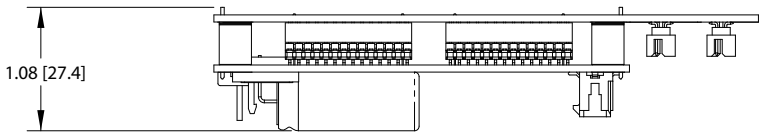

Dimensions in inches [mm]

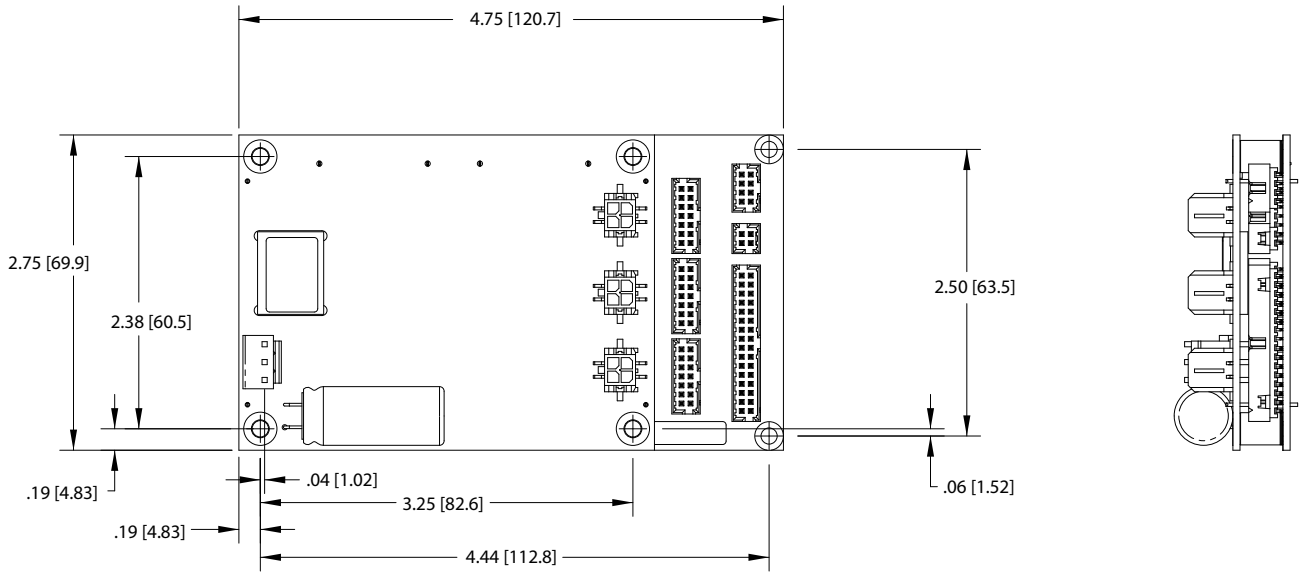

CONNECTIONS

DS1,2,3 LEDs

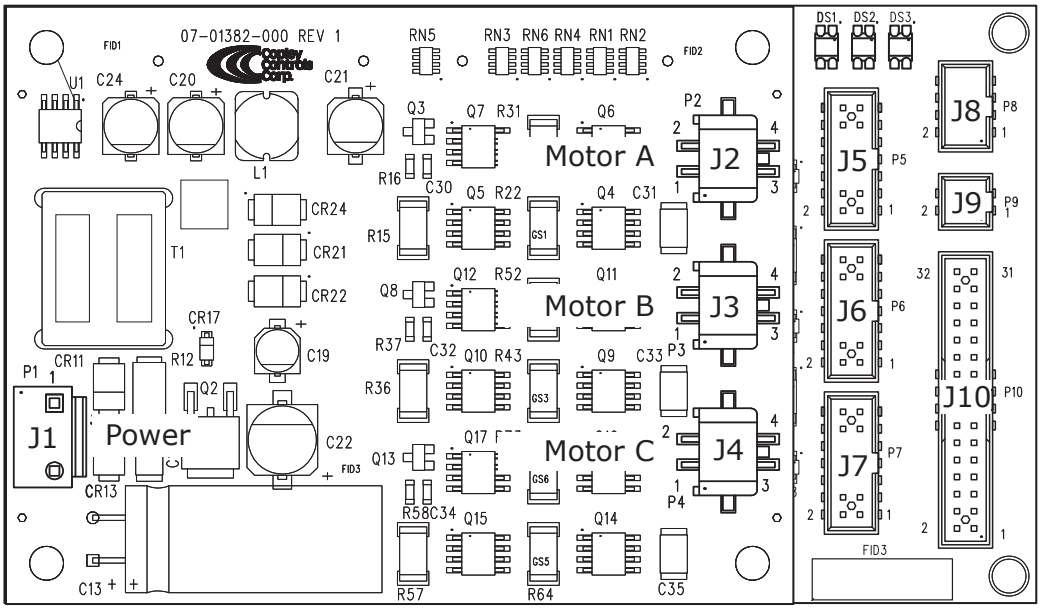

J5,6,7 Encoder

J1 : POWER

SIGNAL	PIN
HV_COM	1
AUX_HV	2
HV	3

J1 CABLE CONNECTOR:

Tyco/AMP Economy Power (EP)
Housing: 1-1123722-3
Contacts(3): 1318912-1
Phospor bronze, tin-plate, AWG 18~22
Crimping tool: 91579-1
Contact Extractor: not required

DS1,DS2,DS3 : LEDS

LED	FUNCTION
DS1	Axis A drive status
DS2	Axis B drive status
DS3	Axis C drive status

J2 : AXIS A MOTOR

SIGNAL	PIN		SIGNAL
Ph. B	2	4	Ph. /B
Ph. A	1	3	Ph. /A

J3 : AXIS B MOTOR

SIGNAL	PIN		SIGNAL
Ph. B	2	4	Ph. /B
Ph. A	1	3	Ph. /A

J4 : AXIS C MOTOR

SIGNAL	PIN		SIGNAL
Ph. B	2	4	Ph. /B
Ph. A	1	3	Ph. /A

J2,J3,J4 CABLE CONNECTOR:

Tyco: Micro MATE-N-LOK 3 mm poke/crimp
Housing: 794617-4
Contacts(4): 794610-1
Phosphor bronze, tin-plate, AWG 20~24
Crimping tool: 91501-1
Contact Extractor: 843996-6

CONNECTIONS

J5 : AXIS A ENCODER

SIGNAL	PIN		SIGNAL
+5 Vdc Output	14	13	Signal Ground
	12	11	
	10	9	[IN13] Ch. A Motemp
+5 Vdc Output	8	7	Signal Ground
Ch. A Encoder /B	6	5	Ch. A Encoder B
Ch. A Encoder /A	4	3	Ch. A Encoder A
Ch. A Encoder /X	2	1	Ch. A Encoder X

J6 : AXIS B ENCODER

SIGNAL	PIN		SIGNAL
+5 Vdc Output	14	13	Signal Ground
	12	11	
	10	9	[IN14] Ch. B Motemp
+5 Vdc Output	8	7	Signal Ground
Ch. B Encoder /B	6	5	Ch. B Encoder B
Ch. B Encoder /A	4	3	Ch. B Encoder A
Ch. B Encoder /X	2	1	Ch. B Encoder X

J7 : AXIS C ENCODER

SIGNAL	PIN		SIGNAL
+5 Vdc Output	14	13	Signal Ground
	12	11	
	10	9	[IN15] Ch. C Motemp
+5 Vdc Output	8	7	Signal Ground
Ch. C Encoder /B	6	5	Ch. C Encoder B
Ch. C Encoder /A	4	3	Ch. C Encoder A
Ch. C Encoder /X	2	1	Ch. C Encoder X

J7,J6,J7 CABLE CONNECTOR:

Molex Milli-Grid, 14-position poke/crimp
Housing: 51110-1451
Contacts(14): 50394-8100
Phosphor-bronze, 15µ select gold, AWG 26~30
Crimping tool: 11-01-0204
Contact Extractor: 11-26-0100

J8 : CAN

SIGNAL	PIN		SIGNAL
TERMINATOR	8	7	CANH
CAN_GND	6	5	CAN_GND
CANL	4	3	CANL
CANH	2	1	CANH

J8 CABLE CONNECTOR:

Molex Milli-Grid, 8-position poke/crimp
Housing: 51110-0860
Contacts(8): 50394-8100
Phosphor-bronze, gold flash, AWG 26~30
Crimping tool: 11-01-0204
Contact Extractor: 11-26-0100

J9 : RS-232

SIGNAL	PIN		SIGNAL
Signal Ground	4	3	Signal Ground
TxD	2	1	RxD

J9 CABLE CONNECTOR:

Molex Milli-Grid, 4-position poke/crimp
Housing: 51110-0460
Contacts(4): 50394-8300
Phosphor-bronze, 15µ select gold, AWG 26~30
Crimping tool: 11-01-0204
Contact Extractor: 11-26-0100

J10 : CONTROL

SIGNAL	PIN		SIGNAL
[OUT6]	32	31	[OUT5]
[OUT4]	30	29	[OUT3]
[OUT2]	28	27	[OUT1]
Signal Ground	26	25	Signal Ground
+5 Vdc Output	24	23	+5 Vdc Output
[IN12]	22	21	[IN11]
[IN10]	20	19	[IN9]
[IN8]	18	17	[IN7]
[IN6]	16	15	[IN5]
[IN4]	14	13	[IN3]
[IN2]	12	11	[IN1]
+5 Vdc Output	10	9	Signal Ground
Signal Ground	8	7	Signal Ground
Axis C Ref(-)	6	5	Axis C Ref(+)
Axis B Ref(-)	4	3	Axis B Ref(+)
Axis A Ref(-)	2	1	Axis A Ref(+)

J10 CABLE CONNECTOR:

Molex Milli-Grid, 32-position poke/crimp
Housing: 51110-3251
Contacts(32): 50394-8100
Phosphor-bronze, 15µ select gold, AWG 26~30
Crimping tool: 11-01-0204
Contact Extractor: 11-26-0100

CONNECTIONS

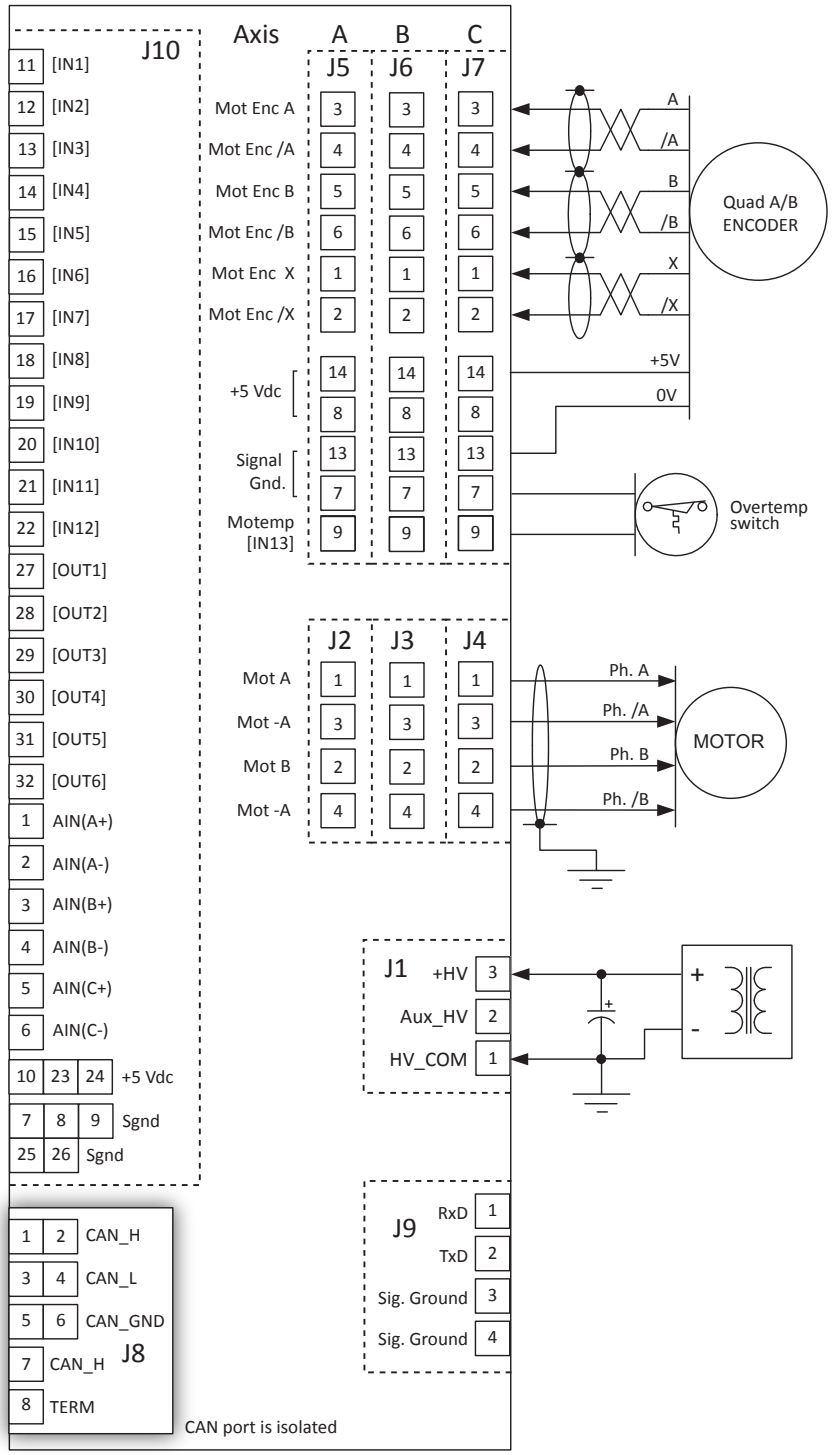

NOTES

1. The total current drawn from pins 8 & 14 on connectors J5, J6, & J7 and from pins 10, 23, & 24 on J10 cannot exceed 750 mAdc.

CME 2 SOFTWARE

Drive setup is fast and easy using *CME 2* software. All of the operations needed to configure the drive are accessible through this powerful and intuitive program. Auto-phasing of brushless motor Hall sensors and phase wires eliminates "wire and try". Connections are made once and *CME 2* does the rest thereafter. Encoder wire swapping to establish the direction of positive motion is eliminated.
Motor data can be saved as .ccm files. Drive data is saved as .ccx files that contain all drive settings plus motor data. This eases system management as files can be cross-referenced to drives. Once a drive configuration has been completed systems can be replicated easily with the same setup and performance.

RS-232 COMMUNICATION

ST3-055-04 is configured via a three-wire, full-duplex RS-232 port that operates from 9,600 to 115,200 Baud. CME 2 software communicates with the drive over this link for commissioning and adjustments.
When operating as a stand-alone drive that takes command inputs from an external controller, CME 2 is used for configuration. When operated as a CAN node, CME 2 is used for programming before and after installation in a CAN network. ST3-055-04 can also be controlled via CME 2 while it is in place as a CAN node. During this process, drive operation as a CAN node is suspended. When adjustments are complete, CME 2 relinquishes control of the drive and returns it to the CAN node state. Multiple drives can communicate over a single RS-232 port by daisy-chaining the master drive to other drives using CAN cables. The master drive does the RS-232 communication with the system and echoes the commands to the other drives over the CAN bus.

RS-232 CONNECTIONS

The illustration below shows how a cable can be made to connect a computer's COM port to the ST3-055-04. Computers and the ST3 are both DTE (Data Terminal Equipment) devices which means they transmit data on the TxD pins and receive data on the RxD pins. The cable is wired to connect the TxD output of the computer to the RxD input of the ST3, and the RxD input of the computer to the TxD output of the ST3.

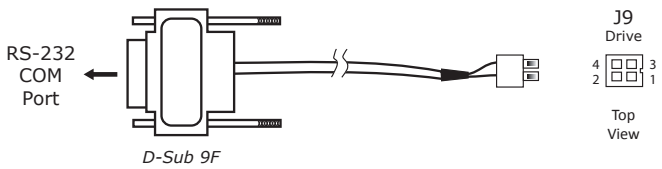

ST3 Connections			
D-Sub 9F	**Pin**		**ST3 J9**
RxD	2	2	TxD
TxD	3	1	RxD
Ground	5	3	Ground

CANOPEN COMMUNICATIONS

Based on the CAN V2.0b physical layer, a robust, two-wire communication bus originally designed for automotive use where low-cost and noise-immunity are essential, CANopen adds support for motion-control devices and command synchronization. The result is a highly effective combination of data-rate and low cost for multi-axis motion control systems. Device synchronization enables multiple axes to coordinate moves as if they were driven from a single control card.

CANOPEN CONTROL

Control of the drive is via a CAN bus using the CANopen protocol. All drive parameters are accessible via CAN as are the control modes: Profile Position Mode, Interpolated Position Mode (PVT), and Homing

CANOPEN CONNECTIVITY

ST3-055-04 uses the CAN physical layer signals CANH, CANL, and GND for connection, and CANopen protocol for communication. Each axis is assigned a non-zero node address that is stored in flash memory. A maximum of 127 CAN nodes are allowed on a single CAN bus. The CAN port is optically isolated from the drive circuits and each signal is duplicated in the CAN connector J8 to faciliate daisy-chain wiring from drive to drive.

CANOPEN TERMINATOR

A 121 Ω resistor for terminating the CAN bus is included in the ST3. The example to the right shows the connections.
If the ST3 is the last device on a CAN bus (i.e. either NODE x or NODE y does not exist), then add a jumper between pins 7 & 8 of the cable connector. If the ST3 is not the last node on a CAN bus (i.e. both Node x and Node y exist) then leave J8 pins 7 & 8 unconnected.

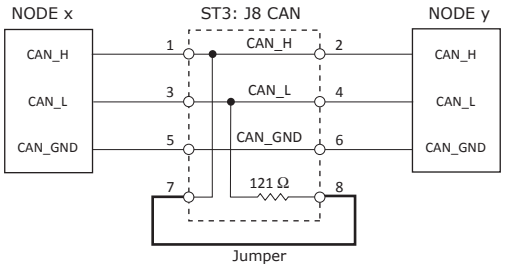

DRIVE STATUS LEDS

Three bi-color LEDs gives the state of each axis by changing color, and either blinking or remaining solid. The possible color and blink combinations are:

- *Green/Solid:* *Axis OK and enabled. Will run in response to reference inputs or CANopen commands.*
- *Green/Slow-Blinking:* *Axis OK but NOT-enabled. Will run when enabled.*
- *Green/Fast-Blinking:* *Positive or Negative limit switch active. Axis will only move in direction not inhibited by limit switch.*
- *Red/Solid:* *Transient fault condition. Axis will resume operation when fault is removed.*
- *Red/Blinking:* *Latching fault. Operation will not resume until drive is Reset*

INPUT/OUTPUT

DIGITAL INPUTS

ST3-055-04 has 12 high-speed digital inputs, all of which have programmable functions.
An additional 3 inputs have pull-ups and RC filters set up for motor over-temperature switches and connect to each of the axis feedback connectors. These 3 can also be programmed with general-purpose logic functions.

Programmable functions of the digital inputs include:

- Positive Limit switch
- Negative Limit switch
- Home switch
- Drive Reset
- Motor over-temperature
- Motion abort

HIGH-SPEED DIGITAL INPUTS 30 VDC MAX

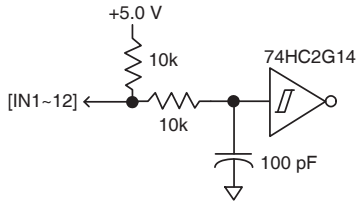

DIGITAL OUTPUTS

Digital outputs [OUT1~6] are open-drain MOSFETs with 1 kΩ pull-up resistors in series with a diode to +5 Vdc. They can sink up to 250 mAdc from external loads operating from power supplies to +30 Vdc. The outputs are typically configured as drive fault and motor brake. Additional functions are programmable. As a drive fault output, the active level is programmable to be HI or LO when a fault occurs. As a brake output, it is programmable to be either HI or LO to release a motor brake when the drive is enabled. When driving inductive loads such as a relay, an external fly-back diode is required. A diode in the output is for driving PLC inputs that are opto-isolated and connected to +24 Vdc. The diode prevents conduction from +24 Vdc through the 1 kΩ resistor to +5 Vdc in the drive. This could turn the PLC input on, giving a false indication of the drive output state.

DIGITAL OUTPUTS 30 VDC, 250 mA MAX

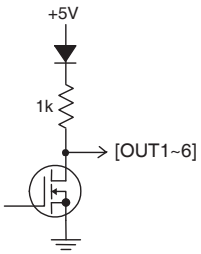

DRIVING AN INDUCTIVE LOAD

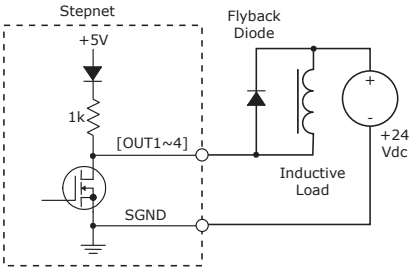

ANALOG INPUTS

Each channel has a ±10V analog input which can be accessed via a CANopen parameter. These channels operate independently from the motion-control functions in the ST3.

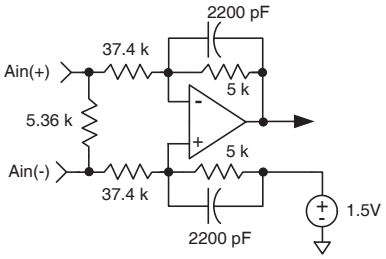

MOTOR CONNECTIONS

MOTOR CONNECTIONS

Motor connections consist of: phases, and thermal sensor. The phase connections carry the drive output currents that drive the motor to produce motion. A thermal switch that indicates motor overtemperature is used to shut down the drive to protect the motor.

MOTOR PHASE CONNECTIONS

Each axis output is dual PWM H-bridges that drive the two motor phases in bipolar mode. Cable should be sized for the continuous current rating of the axis. Motor cabling should use twisted, shielded conductors for CE compliance, and to minimize PWM noise coupling into other circuits. The motor cable shield should connect to motor frame and the drive HV ground terminal (J1-4) for best results.

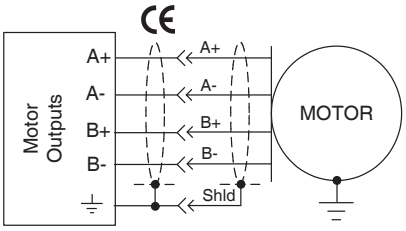

= Shielded cables required for CE compliance

MOTOR TEMPERATURE SENSOR

Digital inputs [IN13~15] connect to the axis feedback connectors for use with motor overtemperature switch.

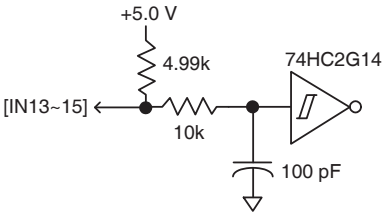

DIGITAL MOTOR ENCODER

The input circuit for the motor encoder A & B signals is a differential line-receiver with a 121Ω resistor is across each input pair to terminate the signal pairs in the cable characteristic impedance. The index or X inputs connect to a bidirectional device for interfacing to absolute encoders. Encoders with differential outputs are required because they are less susceptible to noise that can be picked on single-ended outputs. For best results, encoder cabling should use twisted pair cable with one pair for each of the encoder outputs: A-/A, B-/B, and X-/X. Shielded twisted-pair is even better for noise rejection.

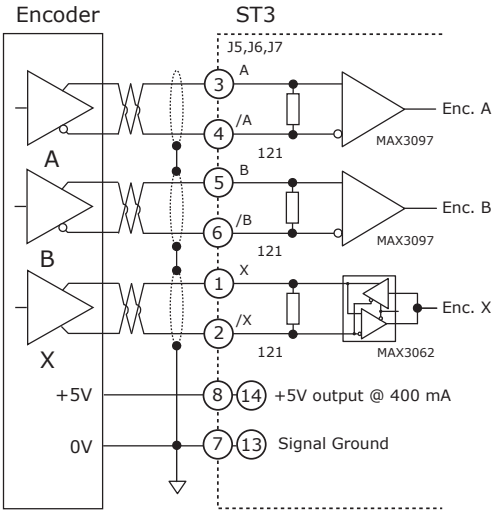

POWER SUPPLIES

Stepnet ST3-055-04 operates typically from transformer-isolated, unregulated DC power supplies. These should be sized such that the maximum output voltage under high-line and no-load conditions does not exceed the drivers maximum voltage rating. Power supply rating depends on the power delivered to the load by the driver.
Operation from regulated switching power supplies is possible if a diode is placed between the power supply and driver to prevent regenerative energy from reaching the output of the supply. If this is done, there must be external capacitance between the diode and driver. The minimum value required is 330 µF per Stepnet mounted no more than 12 inches from the driver.

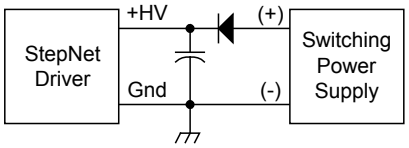

AUX HV (OPTIONAL)

CANopen communications with Stepnet ST3-055-04 can be maintained when +HV is turned off by using the Aux HV input. The voltage has the same range as +HV, and can be greater or less than +HV.
In operation, the Aux HV keeps the driver logic and control circuits active so it is always visible as a node on a CAN bus. The current-position data is maintained making 'homing' unnecessary after system power is re-enabled. If Stepnet ST3-055-04 is operating as a stand-alone driver, Aux HV is not necessary but can be useful if the controller is monitoring driver digital outputs.

GROUNDING CONSIDERATIONS

Power and control circuits in Stepnet share a common circuit-ground (Gnd on J1-4, Signal Ground on J3-7 & 25 and J4-3 & 4). Input logic circuits are referenced to Signal Ground, as are power GND, digital outputs, and encoder. For this reason, driver Gnd terminals should connect to the users' common ground system so that signals between driver and controller are at the same common potential, and to minimize noise. The system ground should, in turn, connect to an earthing conductor at some point so that the whole system is referenced to "earth".
Because current flow through conductors produces voltage-drops across them, it is best to connect the driver HV GND to system earth, or circuit-common through the shortest path, and to leave the power-supply floating. In this way, the power supply (-) terminal connects to ground at the driver HV Return terminals, but the voltage drops across the cables will not appear at the driver ground, but at the power supply negative terminal where they will have less effect.
For CE compliance driver cables should be shielded. Motor phase currents are balanced, but currents can flow between the PWM outputs, and the motor cable shield.
Signals from controller to driver are referenced to +5 Vdc, and other power supplies in user equipment. These power supplies should also connect to system ground and earth at some point so that they are at same potential as the driver circuits. The final configuration should embody three current-carrying loops. First, the power supply currents flowing into and out of the driver at the +HV and Gnd pins on J1. Second the driver outputs driving currents into and out of the motor phases, and motor shield currents circulating between the A+, A-, B+, & B- outputs and HV common. And, lastly, logic and signal currents connected to the driver control inputs and outputs.

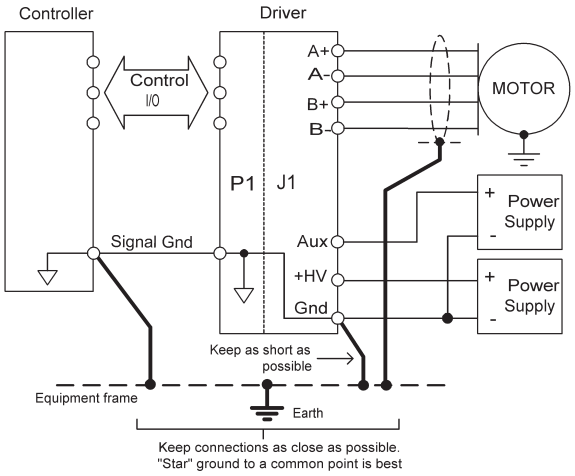

MOUNTING AND COOLING

At 50 Vdc and all three axes operating at the continuous current rating the drive will operate to 45C ambient mounted horizontally with no enclosure. When mounted in an enclosure where spacing to adjacent components and mounting orientation can affect heat removal from the drive, some forced-air might be required. Most stepper applications are intermittent motion and all axes may not be driving at the same time. And, stepper axes are frequently set-up with a holding current that's less than the running current, further reducing dissipation from the worst-case 3 X 2Adc situation. Given that the ST3 temperature can be measured via the CAN bus, ASCII, or RS-232 with CME2, it is a straightforward process to operate the ST3 as expected and measure the temperature rise in the actual mounting configuration. With that information in hand it's possible to decide whether or not forced-air is required.

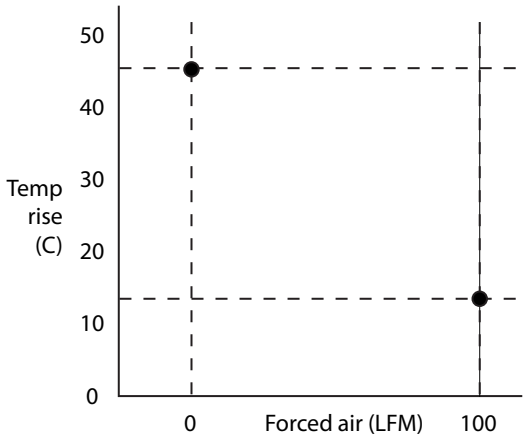

HV: 50 Vdc
Current: 2.0 A
Mode: microstepping
Axes: 3

This chart shows the temperature rise in the Stepnet PC board while operating under maximum voltage and current ratings on all three axes. Two points are shown to illustrate the effects of air movement on the temperature rise of the PC board. With no forced-air (convection) the LFM (Linear Feet per Minute) of the air is zero and temp rise is 45.6 C. At 100 LFM, the temp rise is 13.6 C. Given the many possible combinations of active axes, current, HV, and duty cycles, it is impractical to plot temp rise for all of these. But, these two test points illustrate the effect of forced-air and should help to design the best mounting and cooling configuration for an application.

ORDERING GUIDE

PART NUMBER	DESCRIPTION
ST3-055-04	Stepnet 3-axis stepper driver, 2/4 Adc @ 55 Vdc

EXAMPLE: ORDER 1 ST3-055-04 *STEPNET* DRIVER

Qty	Item	Remarks
1	ST3-055-04	*Stepnet 3-axis stepper* driver

Note: Specifications subject to change without notice

Copley Controls, 20 Dan Road, Canton, MA 02021, USA Tel: 781-828-8090 Fax: 781-828-6547
Web: www.copleycontrols.com