Copley Controls Corp.
Copley Motion Systems LLC

ServoTube 25/38 Module
USER GUIDE

Publication Ref: UM03016/A

Copley Motion Systems LLC
Luckyn Lane, Pipps Hill, Basildon, Essex SS14 3BW England
Tel: +44 (0)1268 287070 Fax +44 (0)1268 293344

WARRANTY

Copley Motion Systems guarantees its equipment against faulty components for a period of twelve months from delivery. Replacement components will be free of charge. Copley Motion Systems shall not in any event be liable for consequential damage or loss.

Copley Motion Systems operates a customer care facility and all requests for repair and replacement should be directed to the Customer Care Department. The serial number of the equipment should be quoted in any communications. The right to change specification and price is reserved by Copley Motion Systems.

DISCLAIMER

Copley Motion Systems makes no guarantees of any kind with regard to this User Guide. Copley Motion Systems shall not be liable for errors contained herein or for consequential or incidental damages incurred as a result of acting on information contained in the manual.

CUSTOMER CARE

For enquiries relating to the operation and use of the ServoTube 25/38 Module described in this User Guide, please contact the Customer Care Helpdesk, Telephone : +44 (0)1268 287070.

Copley Motion Systems LLC
Luckyn Lane, Pipps Hill, Basildon, Essex SS14 3BW England
Tel: +44 (0)1268 287070 Fax: +44 (0)1268 293344

INTERNATIONAL CONTACT DETAILS

Copley Controls Corp. Copley Motion Systems LLC website: http//www.copleycontrols.com	**World Headquarters, USA** Copley Controls Corp. 20 Dan Road, Canton, MA 02021 USA Tel: +1 781 828 8090 Fax: +1 781 828 1750	**European Headquarters** Copley Motion Systems LLC Luckyn Lane, Pipps Hill, Basildon, Essex SS14 3BW England Tel: +44 (0)1268 287070 Fax: +44 (0)1268 293344

ServoTube 25/38 Module
USER GUIDE

Contents

Preliminary pages

Chapters

Appendices

WARNINGS

Warning symbols and meanings

In this User Manual warning symbols are used. These are intended to alert you to the potential hazards to personnel which are associated with the equipment described, in all aspects of use, including handling, installation, operation and maintenance.

Heart pacemakers. Personnel fitted with pacemakers must not handle or work on this equipment.

Strong magnets. The thrust rod contains powerful magnets and will strongly attract ferrous objects. Damage can occur to computer disks and credit cards.

Electric shock. Potentially lethal voltages may be present during the commissioning and servicing of this equipment. Isolate and disconnect all sources of electrical supply before working on the equipment. Particular care needs to be taken when working on or around motor phase connections.

Crush hazard. The forcer may move unexpectedly. Always isolate all sources of electrical supply before working on the equipment.

Heavy object. May need two people to lift.

General hazard. Follow the advice given.

Electrical safety

This equipment must be earthed.

EMC precautions

This equipment is intended for use in a light industrial environment. It is recommended that the following precautions be observed during installation:

- Keep all cable lengths to a minimum.
- Provide as much physical separation as possible between power and sensor cables. In particular, avoid long, parallel runs of cables.
- Maintain screen continuity throughout the cable run.
- Use 360 degree screen terminations where possible. “Pig-tail” terminations are not recommended.
- Ensure compliance with any local electrical and EMC regulations in force at the time of installation. This is the responsibility of the User.

READER'S NOTES

GENERAL

This manual describes the Installation, Maintenance and Spares of the ServoTube module.

ASSOCIATED PUBLICATIONS

The following publications are associated with the ServoTube 25/38 Module User Guide.

Title	Reference Number
ServoTube 25/38 Module Data sheet	DS01100
Copley Xenus (XTL-S) User Guide	-
Copley Xenus (XTL-S) Data Sheet	-
Copley Xenus Micro Panel (XSJ-S) User Guide	-
Copley Xenus Micro Panel (XSJ-S) Data Sheet	-

Chapter 1

Product Overview

The ServoTube Module with fully integrated bearing rail and position encoder offers unprecedented value in high performance applications. The ServoTube Module is a cost effective alternative to ballscrew and belt drive systems where high speed and flexibility are required.

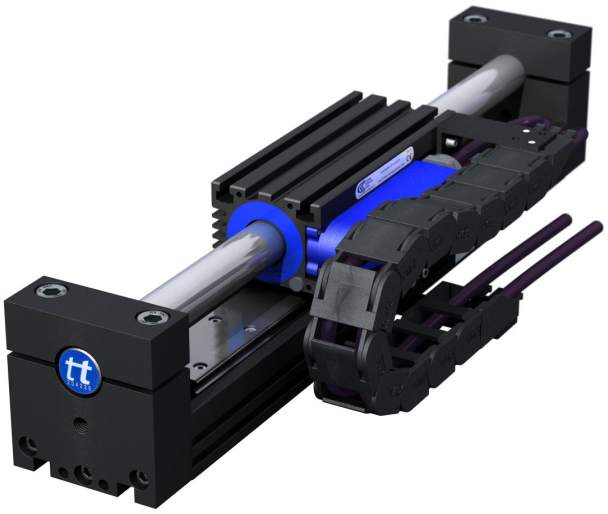

Eight models deliver a continuous force of 51 to 276 N (11 to 62 lb) with peak forces of up to 1860 N (418 lb). Standard stroke lengths of 21 mm to 1323 mm are available.

The patented magnetic design of ServoTube generates 12 micron (0.47 mil) repeatability and 350 micron (14 mil) absolute accuracy, from a non-contact, integral position sensor. The standard ServoTube position encoder output is an industry standard 1V pk-pk sin/cos signal. For applications requiring higher levels of accuracy, the ServoTube Module is available with a fully integrated optical position encoder giving a resolution of up to 1 micron.

The non-contact nature of the direct linear drive results in life expectancy far above that for typical belt drive and ballscrew systems, with the added advantage of no deterioration in accuracy or repeatability over the entire life of the product.

The ServoTube Module is an ideal OEM solution for easy integration into pick-and-place gantry and general purpose material handling machines. The load is mounted directly to the forcer giving a very stable base. Servotube Modules can be easily integrated with each other or with other ServoTube products to create multi-axis systems with minimal design effort.

The ServoTube has superior thermal efficiency, radiating heat uniformly. High duty cycles are possible without the need for forced-air or water cooling.

Servotube is complemented by a range of matched, self tuning servo-amplifiers and indexers complete with plug and play cabling. Amplifiers interface easily to PLCs and feature CANopen network connectivity for distributed control applications.

Chapter 2

Installation

UNPACKING

- Check packaging for signs of damage.
- Remove packaging. Do not discard. In the event of items requiring return, it is recommended that the original packaging be used.
- Metal surfaces may be hot or below 0°C following prolonged storage.
- Ensure that the delivery note correctly reflects your order and the items delivered.
- Check equipment for signs of damage. Never use the equipment if it appears damaged in any way.
- Read the User Guide before installing and using this equipment.

INSTALLATION

Intended operating environment

This equipment is intended for use in an environment within the following conditions:

Operating temperature	0 to +40 °C
Storage temperature	-20 °C to +70 °C
Altitude (above mean sea level)	1000 m
Overvoltage category	II
Pollution degree	2
EMC	light industrial

Mechanical

<u>Mounting module to user's surface</u>

For all modules, ensure that the mounting surface is as flat as possible. The module can be mounted by two methods:

- Using the system clamp top fixings. Both sides should be clamped with a distance between clamp centres of no more than 150 mm. Each M6 bolt should be tightened to a torque of 15 Nm.
- Using the M5 T-nut slots on the underside of the module. This requires access from underneath the mounting surface. Both sides should be fixed with a distance between fixing centres of no more than 150 mm. Each M5 bolt should be tightened to a torque of 12 Nm.

  All torque figures are non lubricated i.e. no thread lock.

Mounting user's payload to module moving forcer

The payload is mounted to the moving forcer top surface using the T-nut slots provided. It is recommended that a minimum of four fixings are used.

- On the SM25 and SB25 modules, the fixings are M5 and should be tightened to a torque of 12 Nm.
- On the XM38 and XB38 modules, the fixings are M6 and should be tightened to a torque of 20 Nm.

SM25 OUTLINE DRAWINGS

FORCER	FORCER LENGTH (mm)	WITH BUFFERS (mm)
2504	160	164
2506	211	215
2508	262	266
2510	313	317

CABLES:

1. Ø7.6 POWER CABLE
2. Ø5.8 SENSOR CABLE
3. Ø4.5 ENCODER CABLE (OPTIONAL)

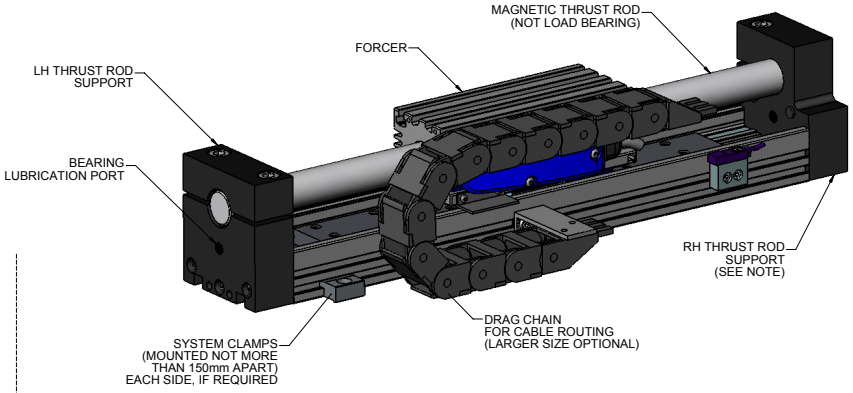

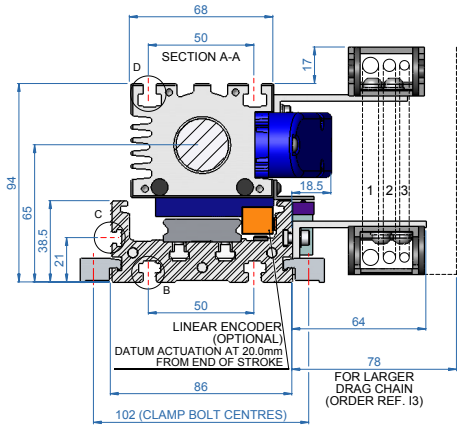

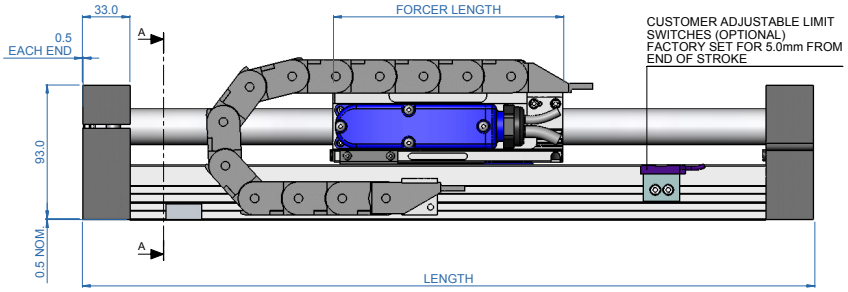

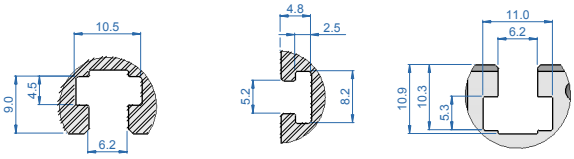

DETAIL B
SLOTS FOR M5 T-NUTS &
M6 SQUARE / HEX. NUTS

DETAIL C
SLOTS FOR M4 SQUARE NUTS

DETAIL D
SLOTS FOR M5 T-NUTS &
M6 SQUARE / HEX. NUTS

NOTE: RH THRUST ROD SUPPORT SHOWN IS FOR 2504 MODULES ONLY. FOR ALL OTHER SIZES THIS SUPPORT WILL BE AS LH THRUST ROD SUPPORT.

Approximate module mass (kg)			
2504	**2506**	**2508**	**2510**
(0.0108 x L)+2.35	(0.0108 x L)+3.04	(0.0108 x L)+3.58	(0.0108 x L)+3.96
where L = Length in mm			

SM25 STROKE TABLES

Length	Stroke			
	2504	**2506**	**2508**	**2510**
253	23	-	-	-
278	48	-	-	-
304	74	23	-	-
330	100	49	-	-
355	125	74	23	-
381	151	100	49	-
406	176	125	74	23
432	202	151	100	49
458	228	177	126	75
483	253	202	151	100
509	279	228	177	126
535	305	254	203	152
560	330	279	228	177
586	356	305	254	203
612	382	331	280	229
637	407	356	305	254
663	433	382	331	280

Length	Stroke			
	2504	**2506**	**2508**	**2510**
689	459	408	357	306
714	484	433	382	331
740	510	459	408	357
766	536	485	434	383
791	561	510	459	408
817	587	536	485	434
868	638	587	536	485
919	689	638	587	536
971	741	690	639	588
1022	792	741	690	639
1073	843	792	741	690
1125	895	844	793	742
1176	946	895	844	793
1227	997	946	895	844
1279	1049	998	947	896
1330	1100	1049	998	947
1381	1151	1100	1049	998

SM38 OUTLINE DRAWINGS

FORCER	FORCER LENGTH (mm)	WITH BUFFERS (mm)
3804	218	222
3806	289	293
3808	360	364
3810	431	435

CABLES:

1. Ø7.6 POWER CABLE
2. Ø5.8 SENSOR CABLE
3. Ø4.5 ENCODER CABLE (OPTIONAL)

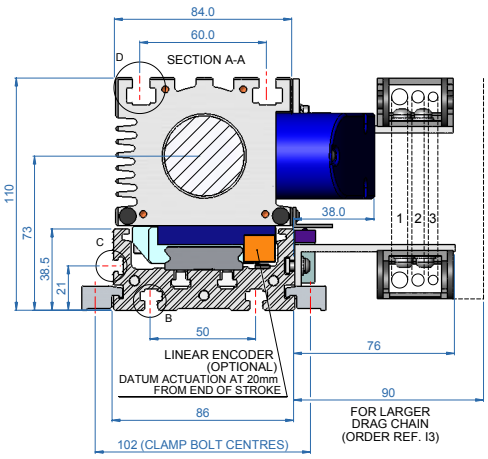

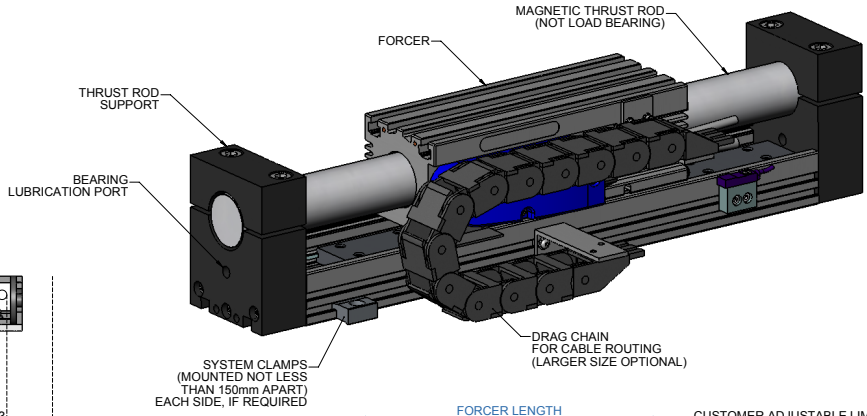

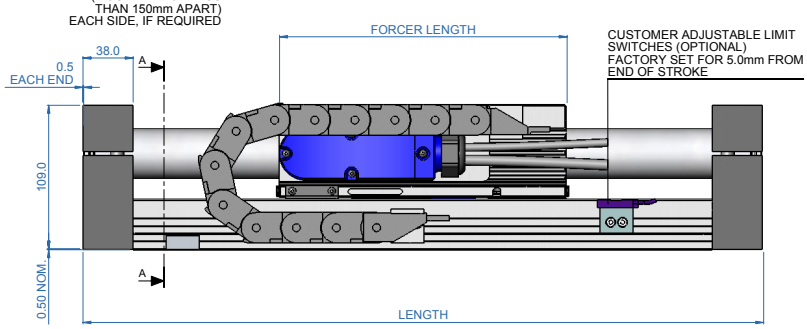

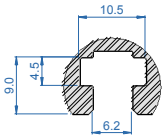

DETAIL B

SLOTS FOR M5 T-NUTS & M6 SQUARE / HEX. NUTS

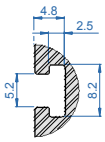

DETAIL C

SLOTS FOR M4 SQUARE NUTS

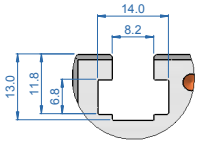

DETAIL D

SLOTS FOR M6 T-NUTS & M8 SQUARE / HEX. NUTS

Approximate module mass (kg)			
3804	**3806**	**3808**	**3810**
(0.01563 x L)+4.26	(0.01563 x L)+5.23	(0.01563 x L)+6.21	(0.01563 x L)+7.19
where L = Length in mm			

SM38 STROKE TABLES

Length	Stroke			
	3804	**3806**	**3808**	**3810**
338	40	-	-	-
373	75	-	-	-
409	111	40	-	-
445	147	76	-	-
480	182	111	40	-
516	218	147	76	-
551	253	182	111	40
587	289	218	147	76
623	325	254	183	112
658	360	289	218	147
694	396	325	254	183
730	432	361	290	219
765	467	396	325	254
801	503	432	361	290
837	539	468	397	326
872	574	503	432	361
908	610	539	468	397
944	646	575	504	433
979	681	610	539	468

Length	Stroke			
	3804	**3806**	**3808**	**3810**
1015	717	646	575	504
1051	753	682	611	540
1086	788	717	646	575
1122	824	753	682	611
1158	860	789	718	647
1193	895	824	753	682
1229	931	860	789	718
1264	966	895	824	753
1300	1002	931	860	789
1336	1038	967	896	825
1371	1073	1002	931	860
1407	1109	1038	967	896
1443	1145	1074	1003	932
1478	1180	1109	1038	967
1514	1216	1145	1074	1003
1550	1252	1181	1110	1039
1585	1287	1216	1145	1074
1621	1323	1252	1181	1110

SB25 OUTLINE DRAWING

FORCER	FORCER LENGTH (mm)
2504	160
2506	211
2508	262
2510	313

CABLES:

1. Ø7.6 POWER CABLE
2. Ø5.8 SENSOR CABLE
3. Ø4.5 ENCODER CABLE (OPTIONAL)

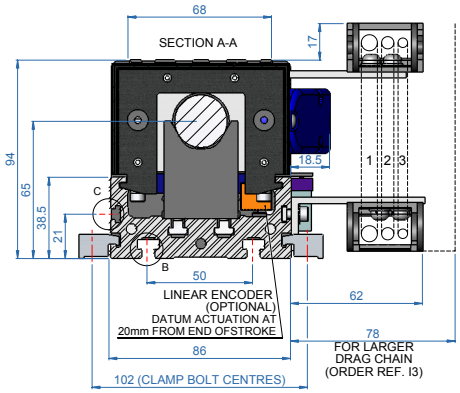

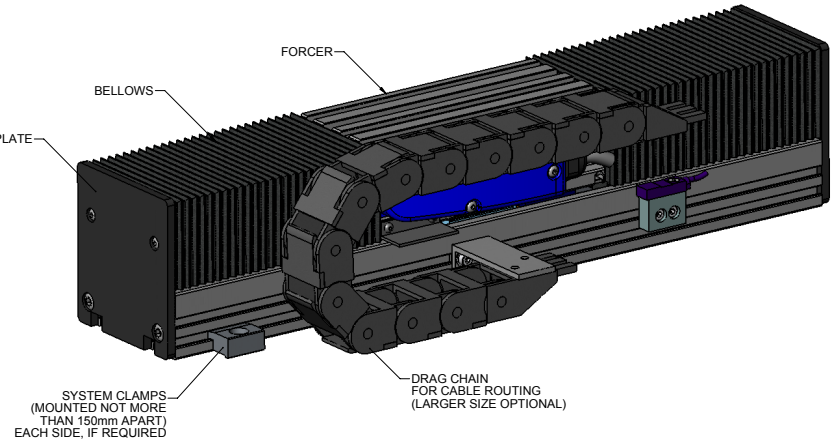

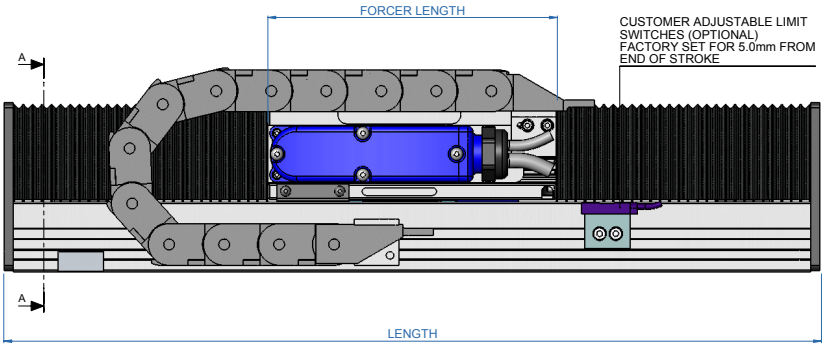

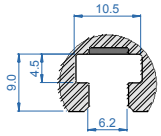

DETAIL B

SLOTS FOR M5 T-NUTS & M6 SQUARE / HEX. NUTS

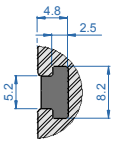

DETAIL C

SLOTS FOR M4 SQUARE NUTS

Approximate module mass (kg)			
2504	**2506**	**2508**	**2510**
(0.00885 x L)+2.49	(0.00885 x L)+2.94	(0.00885 x L)+3.49	(0.00885 x L)+3.85
where L = Length in mm			

SB25 STROKE TABLE

2504		2506		2508		2510	
Length	**Stroke**	**Length**	**Stroke**	**Length**	**Stroke**	**Length**	**Stroke**
271	21	-	-	-	-	-	-
297	47	-	-	-	-	-	-
322	72	**322**	21	-	-	-	-
348	98	**348**	47	-	-	-	-
374	124	**374**	73	**374**	22	-	-
411	149	**399**	98	**399**	47	-	-
452	175	**425**	124	**425**	73	**425**	22
491	200	**462**	149	**450**	98	**450**	47
531	226	**503**	175	**476**	124	**476**	73
572	252	**543**	201	**515**	150	**502**	99
611	277	**582**	226	**554**	175	**527**	124
651	303	**623**	252	**594**	201	**566**	150
690	328	**662**	277	**633**	226	**605**	175
730	354	**702**	303	**674**	252	**645**	201
771	380	**742**	329	**714**	278	**686**	227
810	405	**781**	354	**753**	303	**725**	252
850	431	**822**	380	**793**	329	**765**	278

2504		2506		2508		2510	
Length	**Stroke**	**Length**	**Stroke**	**Length**	**Stroke**	**Length**	**Stroke**
889	456	**861**	405	**832**	354	**804**	303
929	482	**901**	431	**873**	380	**844**	329
970	508	**941**	457	**913**	406	**885**	355
1009	533	**980**	482	**952**	431	**924**	380
1049	559	**1021**	508	**992**	457	**964**	406
1088	584	**1060**	533	**1031**	482	**1003**	431
1169	636	**1140**	585	**1112**	534	**1084**	483
1248	687	**1220**	636	**1191**	585	**1163**	534
1327	738	**1299**	687	**1271**	636	**1242**	585
1406	789	**1378**	738	**1350**	687	**1322**	636
1486	840	**1457**	789	**1429**	738	**1401**	687
1567	892	**1538**	841	**1510**	790	**1482**	739
1646	943	**1618**	892	**1589**	841	**1561**	790
1725	994	**1697**	943	**1669**	892	**1640**	841
1804	1045	**1776**	994	**1748**	943	**1720**	892
1884	1096	**1855**	1045	**1827**	994	**1799**	943
1964	1148	**1936**	1097	**1908**	1046	**1880**	995

XB38 OUTLINE DRAWINGS

FORCER	FORCER LENGTH (mm)
3804	218
3806	289
3808	360
3810	431

CABLES:

1. Ø7.6 POWER CABLE
2. Ø5.8 SENSOR CABLE
3. Ø4.5 ENCODER CABLE (OPTIONAL)

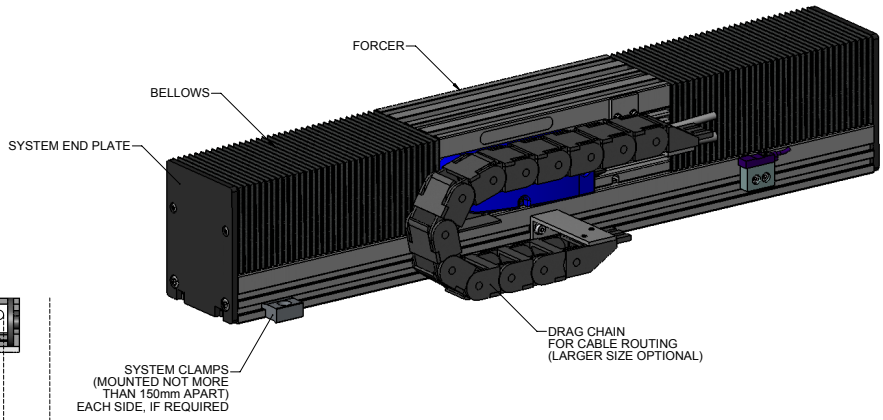

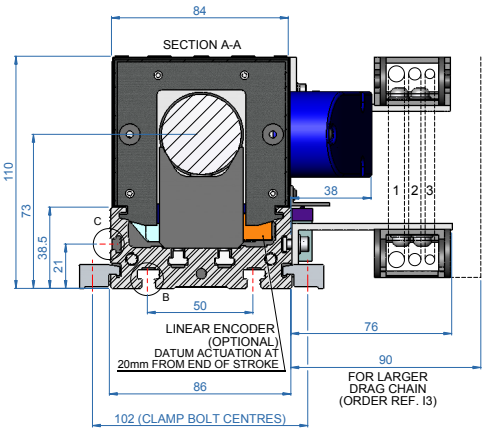

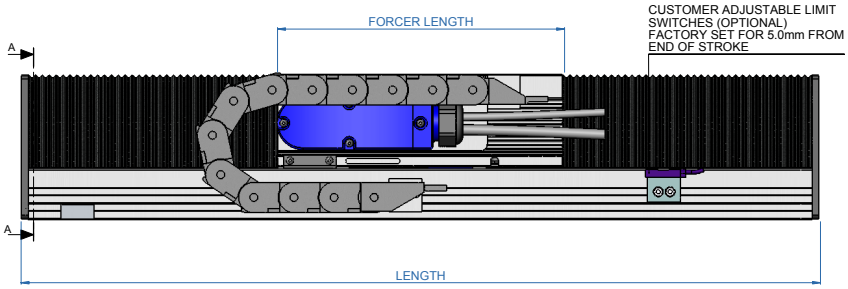

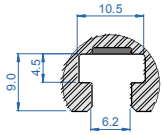

DETAIL B

SLOTS FOR M5 T-NUTS &
M6 SQUARE / HEX. NUTS

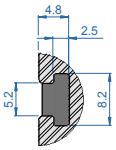

DETAIL C

SLOTS FOR M4 SQUARE NUTS

Approximate module mass (kg)			
3804	**3806**	**3808**	**3810**
(0.01199 x L)+5.28	(0.01199 x L)+6.31	(0.01199 x L)+7.33	(0.01199 x L)+8.28
where L = Length in mm			

XB38 STROKE TABLES

3804		3806		3808		3810	
Length	**Stroke**	**Length**	**Stroke**	**Length**	**Stroke**	**Length**	**Stroke**
387	23	-	-	-	-	-	-
423	59	-	-	-	-	-	-
458	94	**458**	23	-	-	-	-
494	130	**494**	59	-	-	-	-
530	166	**530**	95	**530**	24	-	-
565	201	**565**	130	**565**	59	-	-
606	237	**601**	166	**601**	95	**601**	24
661	272	**636**	201	**636**	130	**636**	59
717	308	**677**	237	**672**	166	**672**	95
773	344	**733**	273	**708**	202	**708**	131
827	379	**788**	308	**748**	237	**743**	166
883	415	**844**	344	**804**	273	**779**	202
938	450	**898**	379	**859**	308	**819**	237
994	486	**954**	415	**915**	344	**875**	273
1050	522	**1010**	451	**971**	380	**931**	309
1104	557	**1065**	486	**1025**	415	**986**	344
1160	593	**1121**	522	**1081**	451	**1042**	380
1214	628	**1175**	557	**1136**	486	**1096**	415
1270	664	**1231**	593	**1192**	522	**1152**	451

3804		3806		3808		3810	
Length	**Stroke**	**Length**	**Stroke**	**Length**	**Stroke**	**Length**	**Stroke**
1326	700	**1287**	629	**1247**	558	**1208**	487
1381	735	**1341**	664	**1302**	593	**1263**	522
1437	771	**1397**	700	**1358**	629	**1318**	558
1491	806	**1452**	735	**1412**	664	**1373**	593
1547	842	**1508**	771	**1468**	700	**1429**	629
1603	878	**1563**	807	**1524**	736	**1485**	665
1657	913	**1618**	842	**1579**	771	**1539**	700
1713	949	**1674**	878	**1634**	807	**1595**	736
1768	984	**1728**	913	**1689**	842	**1650**	771
1823	1020	**1784**	949	**1745**	878	**1705**	807
1879	1056	**1840**	985	**1801**	914	**1761**	843
1934	1091	**1894**	1020	**1855**	949	**1816**	878
1990	1127	**1950**	1056	**1911**	985	**1872**	914
2044	1162	**2005**	1091	**1965**	1020	**1926**	949
2100	1198	**2061**	1127	**2021**	1056	**1982**	985
2156	1234	**2117**	1163	**2077**	1092	**2038**	1021
2210	1269	**2171**	1198	**2132**	1127	**2092**	1056
2266	1305	**2227**	1234	**2188**	1163	**2148**	1092

Electrical

All electrical connections to the ServoTube Module are made via two cables. One carries power to the forcer and the other carries signals from the position sensor. These cables are supplied either pre-terminated for a specific drive amplifier or with flying leads. Where they are pre-terminated, simply plug the cables into the relevant connectors on the drive amplifier.

FORCER POWER CONNECTOR REFERENCE	POSITION SENSOR CONNECTOR REFERENCE	AMPLIFIER
J2	J8	Copley Xenus (XTL-S)
J2	J6	Copley Xenus Micro Panel (XSJ-S)

XENUS (XTL-S)

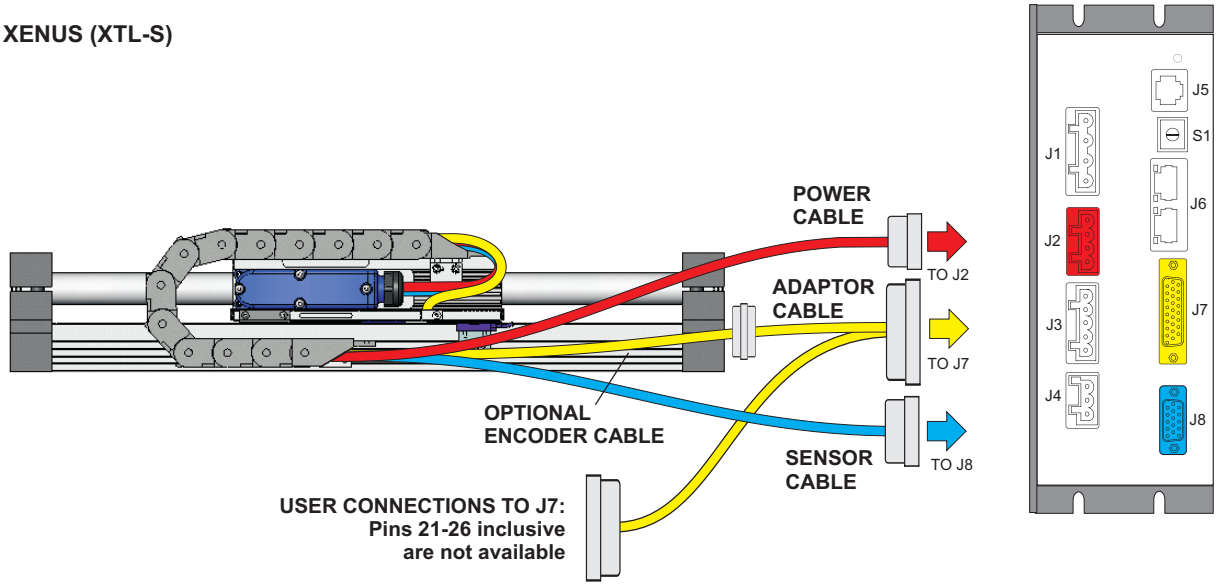

XENUS MICRO PANEL (XSJ-S)

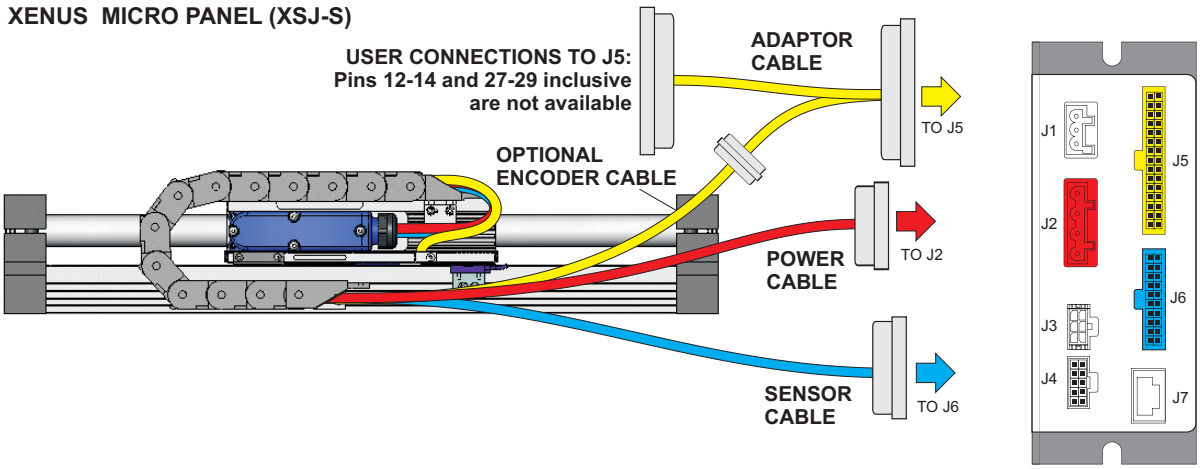

The connections for the three options are shown in the table below:

SENSOR FUNCTION	D-(XTL-S)	M-(XSJ-S)	F-Flying leads
+SIN	14	1	Blue
-SIN	13	11	Red
+COS	12	2	White
-COS	11	12	Brown
+5Vd.c.	4	17	Yellow
0V	5	7	Green
+TH (Thermistor)	10	20	Pink
-TH (Thermistor)	15	14	Grey
SCREEN	1+ shell	1+ shell	Screen
Connector type	15-way high density D	20-way 2.54mm Mini Mate	-
Amplifier connection	J8	J6	-
POWER FUNCTION			
Forcer phase U	4	4	Black 1
Forcer phase V	3	3	Black 2
Forcer phase W	2	2	Black 3
Earth (forcer body)	1	1	Green/Yellow
SCREEN	1	1	Screen
Connector type	4-way 5mm pluggable terminal	4-way 5mm pluggable terminal	-
Amplifier connection	J2	J2	-

ADDITIONAL ENCODER

If an additional encoder has been specified there will be a third cable that should be connected to the relevant encoder input on the drive amplifier used. When used with the Copley Xenus (XTL-S) or Xenus (XSJ-S) an adaptor cable is supplied.

Connections are available via a 9-way D-sub male connector.

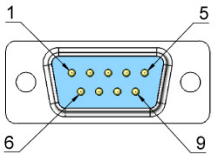

FUNCTION	+5Vd.c.	0V	A+	A-	B+	B-	Z+	Z-	Screen
PIN NUMBER	5	1	2	6	4	8	3	7	Case

LIMIT SWITCHES

WARNING. These limit switches are not intended as safety devices or as part of a system intended to ensure personal safety. When two switches are mounted in close proximity (as in the case of a left and right limit switch), a minimum of 30mm spacing between sense areas must be maintained.

If limit switches have been specified there will be an additional cable per limit switch. These should be connected to the relevent I/O on the drive amplifier.

The output for all types can be normally closed (NC) or normally open (NO) open collector transistor. The NC ouptuts switch open when a limit is detected and current stops flowing in the LOAD. The NO ouputs switch closed when a limit is detected and current starts flowing in the LOAD.

A red indicator shows when a limit is detected.

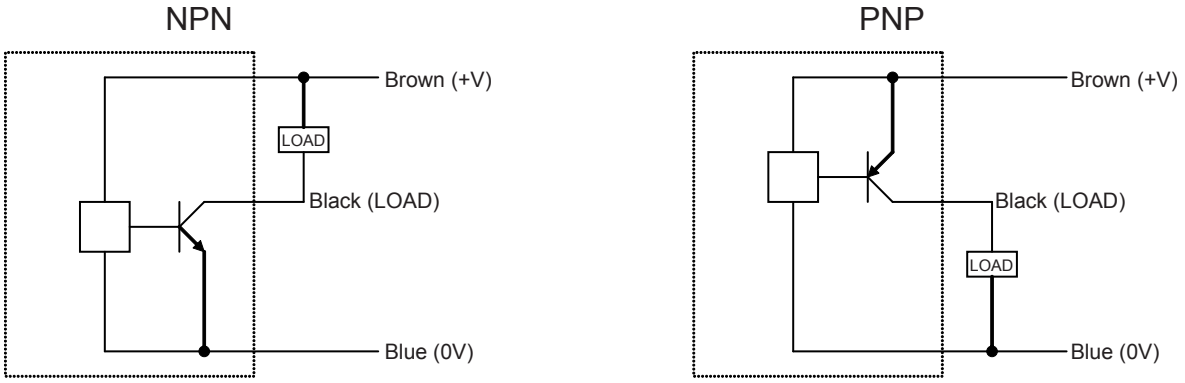

OVER-TEMPERATURE SENSOR

CAUTION. It is strongly recommended that the forcer over-temperature sensor is connected to the drive amplifier or servo controller <u>at all times</u> in order to reduce the risk of damage to the forcer due to excessive temperatures.

Chapter 3

Maintenance

WARNING
ISOLATE AND DISCONNECT ALL SOURCES OF ELECTRICAL SUPPLY BEFORE WORKING ON THE EQUIPMENT.

PREVENTATIVE MAINTENANCE

ALL MODULES

Bearing System

The ServoTube modules are supplied as complete, ready to use mechanical systems. Each system incorporates a profile rail re-circulating ball bearing system for support and guidance. The bearing carriages, to which the moving forcer is attached, are fully charged with grease before delivery. During the life of the system, this grease will need to be replenished. The interval for replenishment will vary depending on the parameters of operation. Systems carrying heavy payloads and travelling at high speeds with fast acceleration and deceleration will need re-greasing more often than systems carrying light payloads and travelling at slower speeds. However, as a general guide, re-greasing is recommended at intervals of 1000 km.

In order to re-grease the bearing carriages effectively and with minimum spillage, a delivery tube with a specially designed nozzle to engage with the lubrication nipples on the bearing carriages is required. These are available from your supplier complete with a fully charged, small (70 g) side lever grease gun.

Description	Order Code
Standard lithium based grease	400 999 120

CAUTION. Different types of grease should never be mixed as they can cause damage to the bearing rail due to their incompatibility. The bearing system must only be lubricated via the bearing carriages. Do not lubricate the bearing rail. Do not lubricate the thrust rod, it is not a bearing surface.

Re-greasing

Procedure for modules without bellows (SM25 and XM38)

- Move the forcer to one end.
- Each thrust rod end support has an M10 through hole which lines up with the bearing carriage lubrication nipple. These can be seen in Figure 3.1. For clarity, the forcer has been removed.
- Insert the grease gun delivery tube through the M10 hole and engage the nozzle with the bearing carriage lubrication nipple. The grease gun nozzle does not attach itself so opposing pressure will need to be applied to the grease gun and forcer.
- Transfer of grease into the bearing carriages is achieved by squeezing the grease gun lever 1-2 times. If grease is seen coming out of the bearing carriages stop squeezing the lever. Over greasing does not damage the bearings but is not desirable.
- Remove the grease gun.

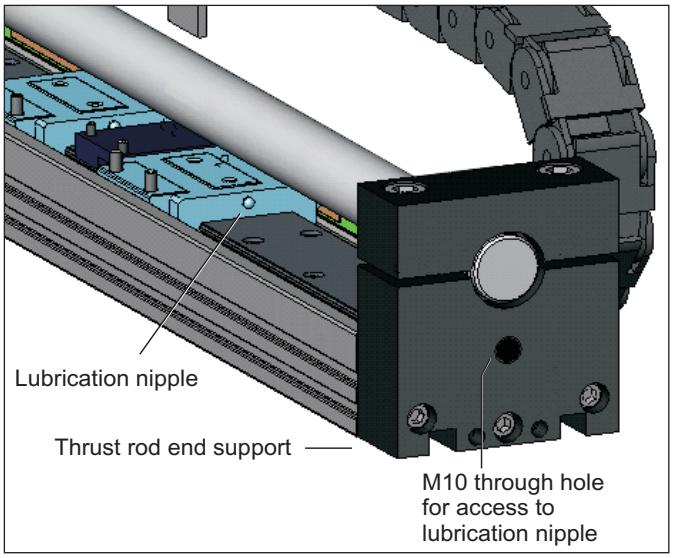

Figure 3.1

Note. *There is only one bearing carriage on the SM2504 module.*

- Move the forcer to the opposite end. Repeat the above steps to re-grease the other bearing carriage.
- Move the forcer by hand to and fro in order to distribute the grease.

Note. *If too much grease has been transferred into the bearing carriages the excess should be cleaned away. If left, it may interfere with the function of an optional encoder where fitted.*

Procedure for modules with bellows (SB25 and XB38)

To re-grease an SB module, it is necessary first to remove the bellows.

- Refer to ‘Removing the Bellows’ on page 24.
- The lubrication nipple can be seen in Figure 3.2 after the bellows have been removed. For clarity, the forcer has been removed.
- Engage the grease gun delivery tube and the nozzle with the bearing carriage lubrication nipple. The grease gun nozzle does not attach itself so opposing pressure will need to be applied to the grease gun and forcer.
- Transfer of grease into the bearing carriages is achieved by squeezing the grease gun lever 1-2 times. If grease is seen coming out of the bearing carriages stop squeezing the lever. Over greasing does not damage the bearings but is not desirable.
- Remove the grease gun.

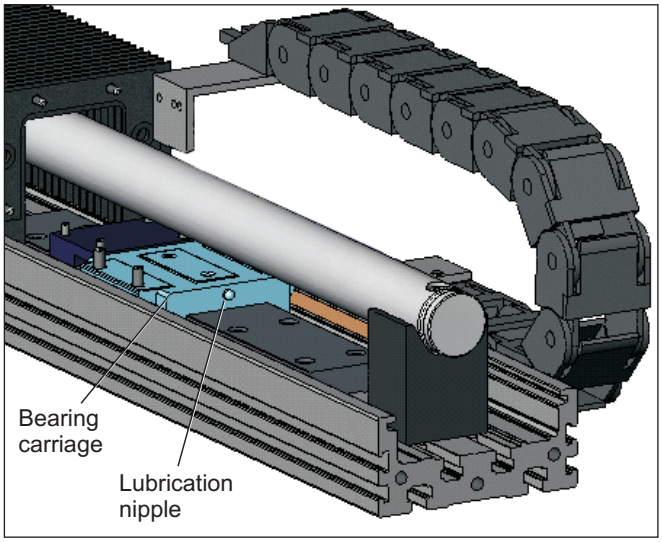

Figure 3.2

Note. *There is only one bearing carriage on the SB2504 module.*

- Move the forcer to the other end. Repeat the above steps to re-grease the other bearing carriage.
- Move the forcer by hand to and fro in order to distribute the grease.

  Note. *If too much grease has been transferred into the bearing carriages the excess should be cleaned away. If left, it may interfere with the function of an optional encoder where fitted.*

- Replace the bellows as described on page 25.

Thrust rod

The thrust rod must be kept clean and central to the forcer bore to avoid damage to the windings inside the forcer. Check that the thrust rod is centrally aligned by moving the forcer along the entire length of the thrust rod and observing the gap between the thrust rod and forcer bore.

If the thrust rod is becoming polished in places, this is usually an indication that the forcer is coming into contact with the thrust rod. Check the surface of the thrust rod for any raised areas that may damage the inside lining of the forcer. A soft cloth can be used to clean the thrust rod and self adhesive tape can be used to lift off any ferrous debris that may be attracted to it.

Forcer

Forcers have a fluoropolymer inner lining that does not require maintenance. However, when carrying out checks, a visual inspection should be made to ensure there is nothing trapped in the ends of the forcer.

Cables

Check that all connecting cables are secured and not under strain. Inspect cables for signs of wear.

Encoder (where fitted)

The encoder scale should be cleaned with a soft, lint free cloth to remove any oil, grease or dirt. Under no circumstances must solvents be used on optical encoder scales as the protective lacquer coating may become damaged.

Bellows

On module systems with bellows (SB25 and XB38), periodically remove any debris from the bellows folds that may reduce the movement of the forcer.

CORRECTIVE MAINTENANCE

The corrective maintenance by the user is limited to the following items:

- Power and Sensor cables
- Thrust rod
- Bellows (SB25 and XB38 only)
- Forcer
- Encoder readhead

CABLE REPLACEMENT

Note. *It is not possible to replace an encoder cable. If an encoder cable needs replacing, the complete encoder assembly will have to be replaced. See ENCODER READHEAD on page 31 in this chapter.*

CAUTION. If the optional Renishaw encoder is fitted, it has an integral cable that also runs through the drag chain. Take care not to damage this item when releasing the other cables.

Removal

- Unclip the covers of all links in the drag chain. These are shown coloured green in Figure 3.3. They can be removed as a single item by progressively pulling up the tongue of the first cover until all are unclipped.

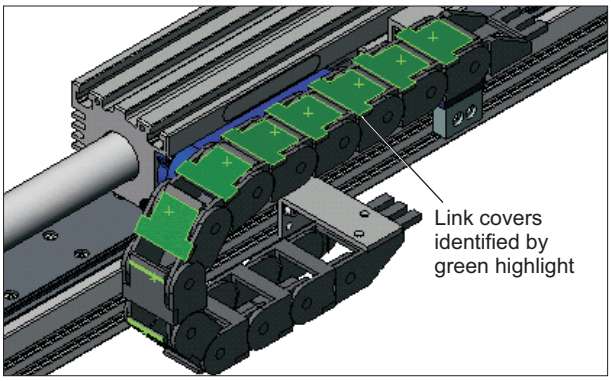

Figure 3.3

- Remove any cable ties that have been used to hold the cables in position.

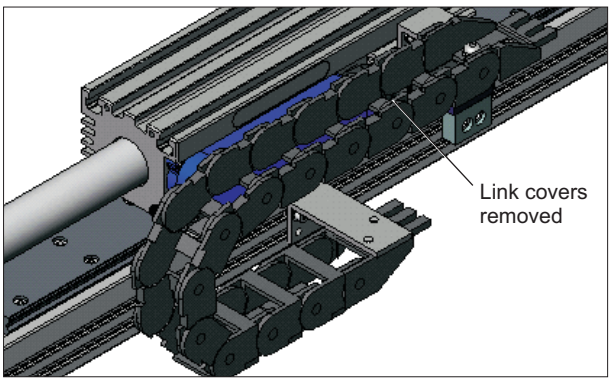

Figure 3.4

- With the cover section removed the cables can now be removed from the drag chain, see Figure 3.4.

- To gain access to the cable termination connectors inside the pod, unscrew the four M3 fixing screws, see Figure 3.5.

  Note that the pod lid fixing screws are of different lengths. Make a record from where each fixing is removed so they can be correctly replaced later.

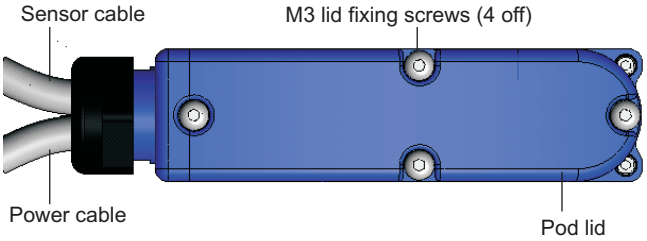

Figure 3.5

PIN NUMBER	FUNCTION
1	Phase U
2	Phase V
3	Phase W
Chassis	Earth/Screen

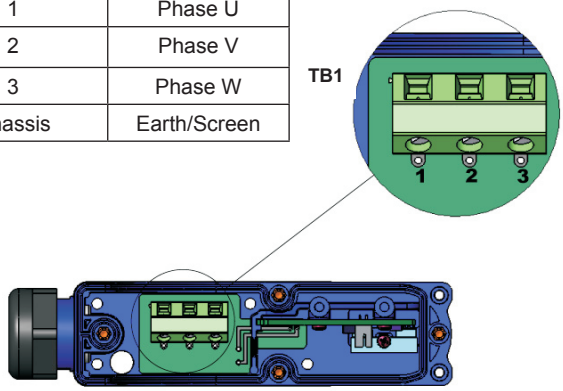

Figure 3.6

PIN NUMBER	FUNCTION
1	+SIN
2	-SIN
3	+COS
4	-COS
5	+5Vd.c.
6	0V
7	+TH (Thermistor)
8	-TH (Thermistor)

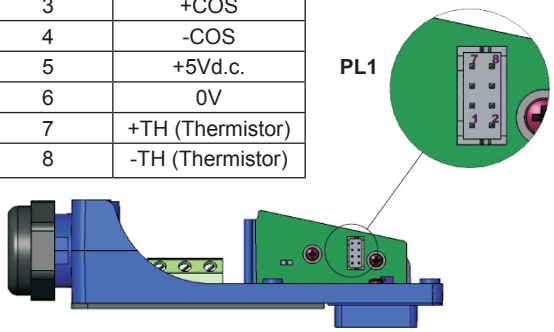

Figure 3.7

- Remove the pod lid from the termination box to reveal the cable termination connectors inside, see Figure 3.6 and Figure 3.7.
- Loosen the two fixings on the cable clamp to fully free the cables.
- Disconnect the power cable from the PCB mounted screw terminal connector TB1, and unscrew the earth/screen terminal to remove the eyelet fastened to the cable screen terminal.
- Unplug the sensor cable from the vertical PCB at connector PL1 (see Figure 3.7).
- Unscrew the pressure nut from the cable gland and carefully pull the two cables out of the pod through the cable gland. The cable assembly will comprise sensor and power cables, the pressure nut and at the other end of the cables, the amplifier connectors.

  Note. *The cable assembly is the replacement item when either power or sensor cable needs to be replaced.*

Replacement

Re-fitting the cable assembly is the reverse of the removal procedure.

- Feed the power and sensor cables to be connected to the connectors in the pod, through the cable gland to reach TB1 and PL1.
- Plug PL1 into its connector on the edge-mounted PCB.
- Connect the power cable leads to TB1 and the earthing point. Refer to Figure 3.6 for the connection table.

- Refit and tighten the cable retaining clamp.
- Screw on and tighten the pressure nut.
- Replace the pod cover taking care not to damage the sealing gasket on the pod.
- Fit the M3 fixings according to the record made when they were removed, and tighten to a torque of 0.7 Nm.
- Place the cables back inside the drag chain.
- Fit new cable ties to secure the cables as originally fitted.
- Re-clip the covers that were previously unclipped.

BELLOWS REPLACEMENT

Removal

- Remove the two M6 button head fixings securing the bellows system end plate to the backing bar, Figure 3.8.

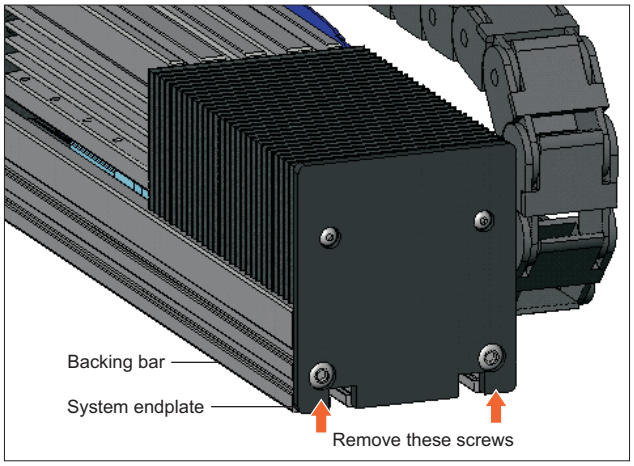

Figure 3.8

- Move the forcer towards the side being replaced and slide the bellows with attached system end plate, out of the module backing bar.
- Fold the bellows (not shown) still connected to the system end plate, back over the top of the forcer body to give access to the fixings that secure the bellows fixing plate to the forcer, see Figure 3.9.
- Remove the four M3 countersunk fixings that secure the bellows fixing plate to the forcer and remove the bellows from the module assembly. The module with bellows removed is shown in Figure 3.10.

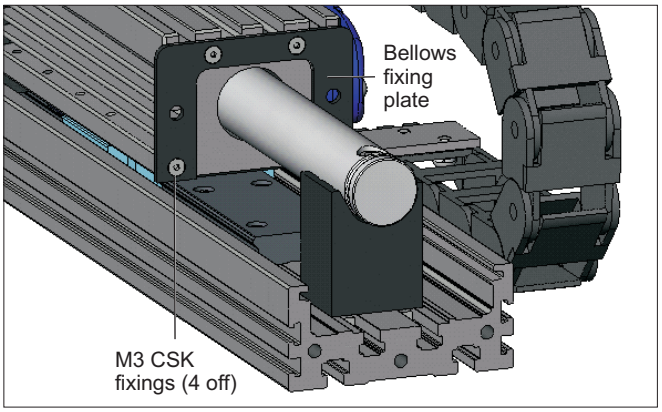

Figure 3.9

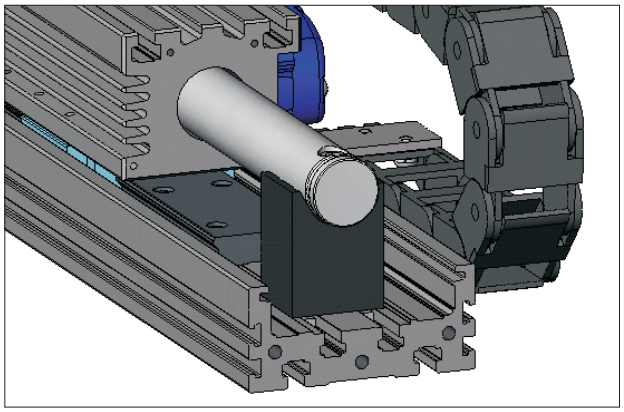

Figure 3.10

- Extract the bellows fixing plate from the last fold on the bellows.
- Remove the two M4 button head fixings securing the bellows to the bellows fixing plate in the first fold of the bellows.
- Extract this fixing plate from the bellows.

Replacement

- Insert the bellows fixing plate into the first fold on the bellows (the end that connects to the system end plate).
- Replace the two M4 fixings that secure the bellows to the system end plate and tighten to a torque of 0.7 Nm, see Figure 3.11.

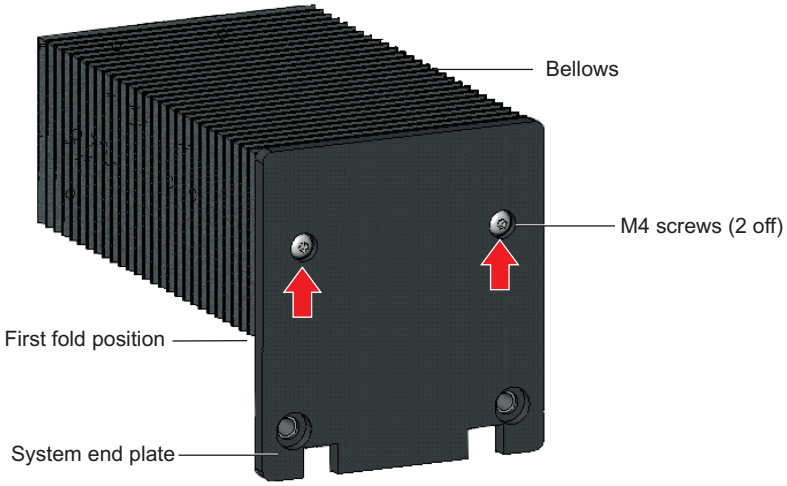

Figure 3.11

- Insert the second bellows fixing plate into the last fold on the bellows (the forcer end).
- Partially slide the bellows back onto the module assembly.
- Move the forcer towards the side being replaced and slide the bellows up to the end of the forcer body.
- Fold the bellows back over the top of the forcer body to enable access to the fixings that secure the bellows fixing plate to the forcer body.
- Replace the four M3 countersunk fixings that secure the bellows to the forcer body and tighten to a torque of 0.7 Nm.
- Slide the bellows back onto the module assembly.
- Replace the two M6 button head fixings to secure the bellows system end plate to the module backing bar and tighten to a torque of 4 Nm.

THRUST ROD REPLACEMENT

SM25 and XM38

Removal

- Move the forcer to the centre of the module, Figure 3.12.

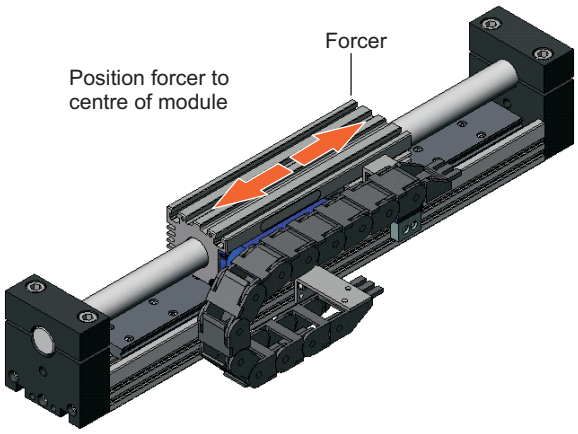

Figure 3.12

- Place spacers around or under the thrust rod to prevent it coming into contact with the bearing rail or other ferrous material. Foam pipe insulation or wooden blocks are ideal for this.
- Loosen the two M10 bolts on each of the thrust rod end supports.

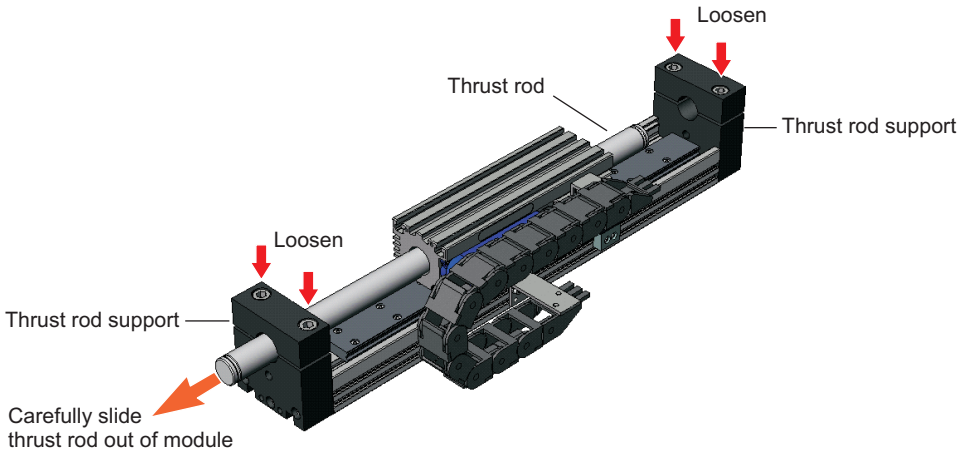

Figure 3.13

Note. *When an SM2504 is fitted with an optional encoder, one of the thrust rod supports has only one M10 bolt).*

Important. *There is a serial number label on one end of the thrust rod. Record the end that has the serial number and its orientation. It is important when replacing the thrust rod this parameter is maintained. The serial number should be horizontal and read left to right as shown right.*

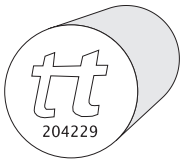

- Carefully slide the thrust rod out through the thrust rod supports and forcer (Figure 3.13) until it is clear of the module assembly, see Figure 3.14.
- Store the thrust rod in a safe place away from ferrous material.

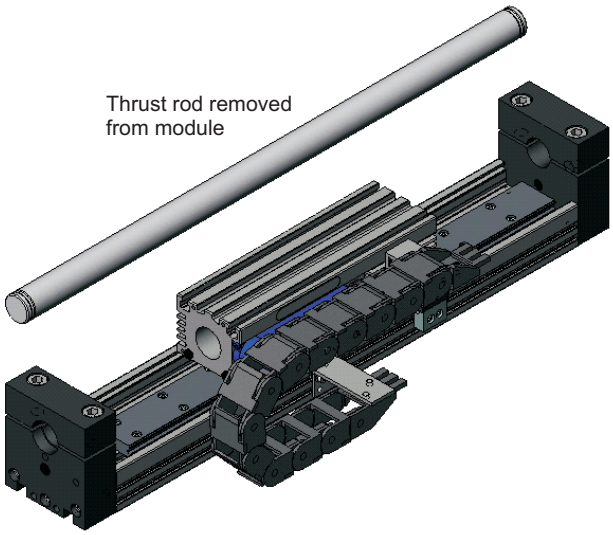

Figure 3.14

Replacement

- Check the orientation of the thrust rod with regard to the end with the serial number label.
- Carefully slide the thrust rod in through the first thrust rod support. Place spacers around or under the thrust rod as soon as it passes through the thrust rod support.
- Continue to slide the thrust rod to pass through the forcer and into the other thrust rod support.
- Check the orientation of the thrust rod serial number label.
- Tighten the M10 fixings in the thrust rod support to a torque of 50 Nm.

SB25 and XB38

Removal

- Remove the bellows as previously described.The module will appear as it is shown in Figure 3.15.
- Place spacers around or under the thrust rod to prevent it coming into contact with the bearing rail or other ferrous material. Foam pipe insulation or wooden blocks are ideal for this.

  Note. *On the SB25 modules, M8 bolts secure the thrust rod to the thrust rod supports. The XB38 module uses M10 bolts.*

  Important. *There is a serial number label on one end of the thrust rod. Record the end that has the serial number and its orientation. It is important when replacing the thrust rod this parameter is maintained. The serial number should be horizontal and read left to right as shown right.*

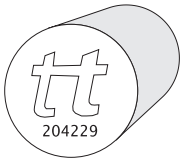

- Remove the two bolts that secure the thrust rod to the two thrust rod supports, see Figure 3.15.

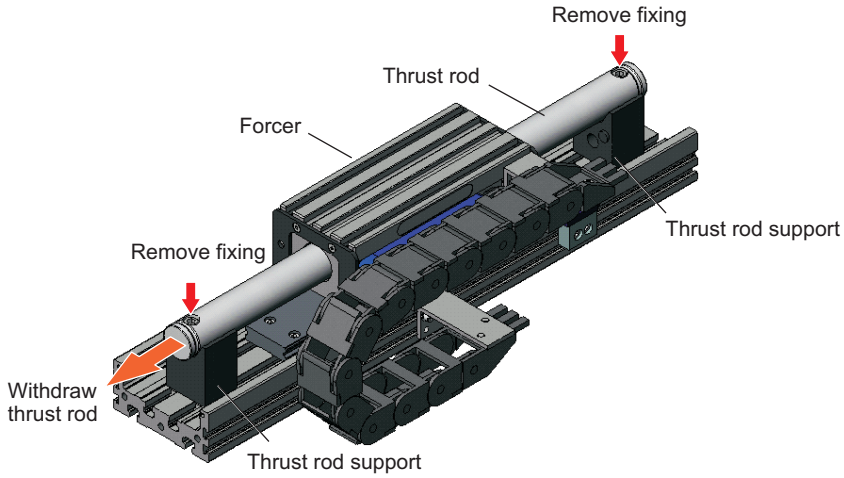

Figure 3.15

- Carefully slide the thrust rod out through the forcer and across the thrust rod supports until it is clear of the module assembly.
- Store the thrust rod in a safe place away from ferrous material.

Replacement

- Check the orientation of the thrust rod with regard to the end with the serial number label.
- Carefully slide the thrust rod in through the first thrust rod support. Place spacers around or under the thrust rod as soon as it passes through the thrust rod end support.
- Continue to slide the thrust rod through the forcer and into the opposite thrust rod support.
- Check the orientation of the thrust rod serial number label.
- Refit and tighten the two bolts that secure the thrust rod to the thrust rod supports.

  Note. *The SB25 module uses M8 fixings and the XB38 uses M10 fixings. Tighten to a torque of 50 Nm for both versions.*

- Refit the bellows as described on page 25.

FORCER REPLACEMENT

When the forcer is removed from the module, it will have the following items attached that will need to be transferred to the replacement forcer.

- Bearing carriage(s). There will be 1 or 2 bearing carriages depending on the particular version.
- The encoder readhead bracket fitted with the encoder readhead.
- The limit switch actuator if fitted.
- The drag chain upper mounting bracket.

The pod base however, is an integral part of the forcer and is programmed for the forcer it is attached to. The replacement forcer will have its own specifically programmed pod base.

Removal

- Remove the bellows (if applicable) as described on page 24.
- Remove the thrust rod as described on page 26.
- Follow the procedure for Cable Replacement described on page 22 and free the cables from the drag chain, but **do not** remove the cables from the pod. Additionally remove the drag chain link that secures the drag chain to the upper mounting bracket which is fitted to the forcer.

SM25 and XM38

- For the SM25 or XM38, see Figure 3.16. Remove the three M6 fixings securing a thrust rod support to the backing bar and slide the thrust rod support out of the backing bar, see Figure 3.17.
- Remove the forcer by sliding it off the bearing rail taking care to keep the forcer square to the bearing rail so that balls are not lost from the re-circulating bearing carriage(s). If balls do fall out they can be re-inserted into the carriages. Push the ball bearings using a small screwdriver into the end of the re-circulating path at the plastic end plates on the carriage.

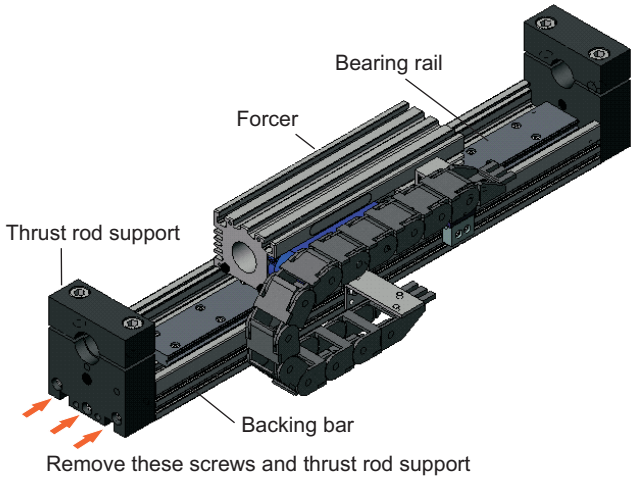

Figure 3.16

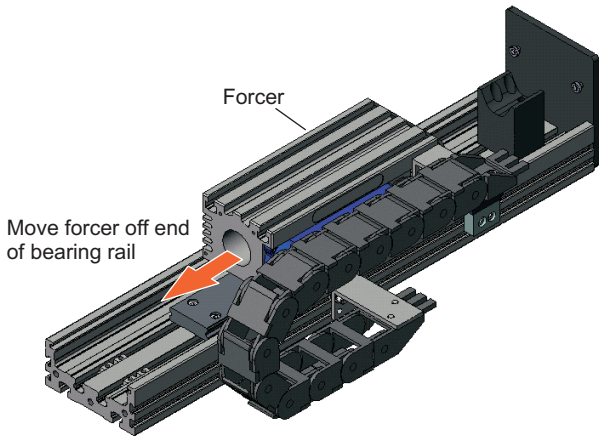

Figure 3.17

- On the SB25 or XB38, Figure 3.18, remove the four M4 fixings securing one thrust rod support to the backing bar and slide the thrust rod support out of the backing bar, Figure 3.19.
- Remove the forcer by sliding it off the bearing rail taking care to keep the forcer square to the bearing rail so that balls are not lost from the re-circulating bearing carriage(s). If balls do fall out they can be re-inserted into the carriages. Push the ball bearings using a small screwdriver into the end of the re-circulating path at the plastic end plates on the carriage.

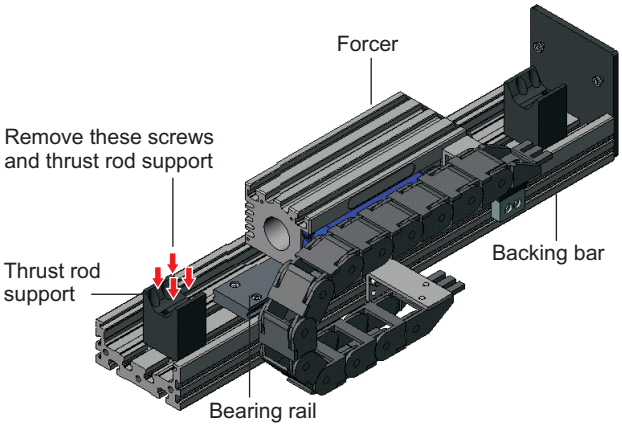

Figure 3.18

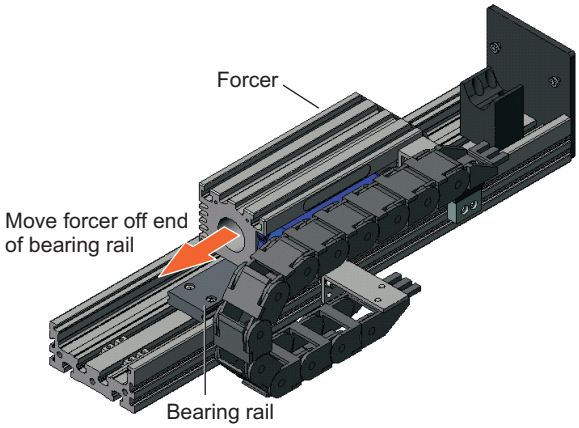

Figure 3.19

Preparation of replacement forcer

Transfer the following items from the removed forcer to the replacement forcer:

- Bearing carriage(s). On SM/SB25 align the bearing carriages level with and parallel to the datum edge. On XM/XB38 align the bearing carriages to be 8 mm below and parallel to the datum edge
- The encoder readhead bracket fitted with the encoder readhead (optional items)
- The limit switch actuator (optional).
- The drag chain upper mounting bracket.

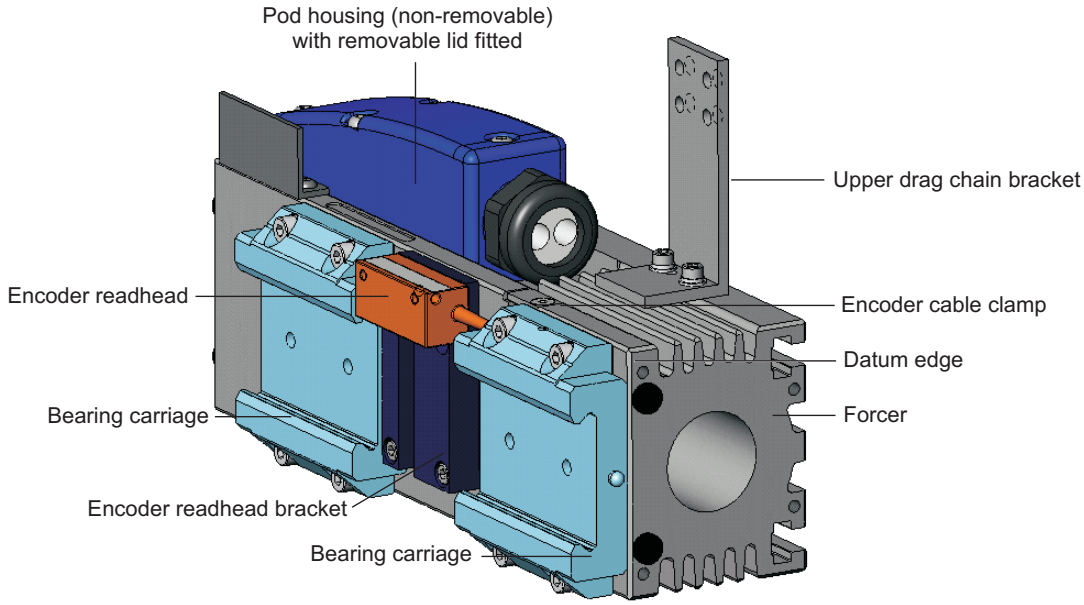

Figure 3.20

Replacement

- Slide the newly assembled forcer on to the bearing rail taking care to keep the forcer square to the bearing rail so that balls are not lost from the re-circulating bearing carriage(s). If balls do fall out they can be re-inserted into the carriages. Push the ball bearings using a small screwdriver into the end of the re-circulating path at the plastic end plates on the carriage.
- **On the SB25 or XB38:** slide the thrust rod support on to the backing bar and tighten the four M4 fixngs to a torque of 4 Nm.
- **On the SM25 or XM38:** refit the thrust rod support to the end of the backing bar and secure using the three M6 fixings tightened to a torque of 20 Nm.
- Replace the thrust rod as described on page 27.
- Replace the cable assembly as described on page 22.
- Replace the bellows (if fitted) as described on page 25.

ENCODER READHEAD (Optional item)

Before commencing any work, it is important to note that the encoder may require alignment to achieve optimum performance after replacement.

Removal

- If applicable, remove the bellows as described on page 24.
- Remove the thrust rod as described on page 26.
- Remove the forcer as described on page 28.
- On the underside of the forcer remove the M3 countersunk fixing and clamp holding the encoder cable to the forcer body. Refer to Figure 3.20 for location of the encoder readhead bracket and encoder readhead.
- Remove the encoder (cable) clamp.
- Undo the four M3 x 6 fixings to remove the encoder bracket.
- Undo the two M3 x 10 fixings to remove the encoder readhead with integral cable.

Replacement

- Refit the replacement encoder readhead to the encoder bracket using the two M3 x 10 fixings and tighten to a torque of 0.7 Nm.
- Refit the encoder bracket to the forcer using the M3 x 6 fixings.
- Route the encoder cable via the clamping groove in the forcer and refit the encoder cable clamp with its M3 x 8 countersunk screw to secure the encoder cable to the forcer body. Tighten to a torque of 0.7 Nm.
- Slide the forcer on to the bearing rail taking care to keep the forcer square to the bearing rail so that balls are not lost from the re-circulating bearing carriage(s). If balls do fall out they can be re-inserted into the carriages. Push the ball bearings using a small screwdriver into the end of the re-circulating path at the plastic end plates on the carriage.

Alignment

The encoder may need aligning. To check:

- Connect the encoder to the control system and apply power to the encoder only.
- Move the forcer along the entire length of the module and check that the LED indicator on the back of the readhead lights up green. It will light up red as it passes over the reference mark. If this does not happen, alignment is necessary.
- Remove the forcer by sliding it off the bearing rail taking care to keep the forcer square to the bearing rail so that balls are not lost from the re-circulating bearing carriage(s). If balls do fall out they can be re-inserted into the carriages. Push the ball bearings using a small screwdriver into the end of the re-circulating path at the plastic end plates on the carriage.
- On the underside of the forcer, loosen the four M3 x 6 fixings securing encoder bracket to the forcer body. *Note. The fixings should be loosened just enough to allow movement of the encoder bracket.*
- Slide the forcer onto the bearing rail taking care to keep the forcer square to the bearing rail so that balls are not lost from the re-circulating bearing carriage(s). Should balls be lost they can be re-inserted into the carriages by pushing them with a small screwdriver into the end of the re-circulating path by the plastic end plates on the carriage.
- Connect the encoder to the control system and apply power to the encoder only. Using a thin piece of rigid plastic (100mm x 20mm x 1mm), adjust the encoder readhead by sliding the plastic between the backing bar and forcer. Push the readhead until the LED on the back of the readhead lights up green.
- Move the forcer along the entire length of the module and check that the LED indicator on the back of the readhead lights up green. It will light up red as it passes over the reference mark.
- Slide the forcer onto the bearing rail taking care to keep the forcer square to the bearing rail so that balls are not lost from the re-circulating bearing carriage(s). Should balls be lost they can be re-inserted into the carriages by pushing them with a small screwdriver into the end of the re-circulating path by the plastic end plates on the carriage.
- On the underside of the forcer, tighten the four M3 x 6 fixings that secure the encoder bracket to the forcer body and tighten each to a torque of 0.7 Nm.
- Refit the forcer, thrust rod and bellows as previously described.

BEARING REPLACEMENT

Should excessive play be detected in the bearing system the bearing will need replacing. It is recommended that all bearing carriages and the bearing rail are replaced at the same time.

Due to the complex nature of the process and specialist equipment required, please contact your supplier regarding replacement.

Chapter 4

Service

SERVICE

Should you need to return any items to Copley Motion Systems, before doing so, please call our Sales coordinator on +44 (0)1268 287070 or send a fax to +44 (0)1268 293344 in order to obtain an RMA (Returned Materials Authorisation) number. The RMA number should then be quoted on all items returned and quoted for all enquiries.

Please note that when returning items it is recommended that the original packaging be used.

ACCESSORIES AND SPARES

The Accessories and Spares for the modules are listed in Tables 4.1 and Table 4.2.

Table 4.1 Accessories

Description	Order Code
Grease Gun Kit	400 999 120
Grease Spares	
Grease Gun Applicator/Nozzle	400 999 007
Standard Grease 150 ml	035 630 016
Mounting Hardware	
M5 T-nut (10 off pack)	045 205 007
M6 T-nut (10 off pack)	046 205 007
M4 Square Nut (100 off pack)	044 205 000
M6 Square Nut (100 off pack)	046 140 010
System clamp - Single Hole	035 915 027
System clamp - Four Hole	035 915 028

Table 4.2 Spares

Description	Length	Order Code
Renishaw readhead replacements		
5 µm readhead	3 metre cable	350 590 161
5 µm readhead	5 metre cable	350 590 162
1 µm readhead	3 metre cable	350 590 157
1 µm readhead	5 metre cable	350 590 158
Limit Switches		
NPN Limit Switch, NC	2 metre cable	200 735 104F
PNP Limit Switch, NC	2 metre cable	200 735 103F
NPN Robotic Switch, NC	5 metre robotic cable	200 735 102F
PNP Robotic Switch, NC	5 metre robotic cable	200 735 101F
NPN Limit Switch, NO	2 metre cable	200 735 094F
PNP Limit Switch, NO	2 metre cable	200 735 093F
NPN Robotic Switch, NO	5 metre robotic cable	200 735 092F
PNP Robotic Switch, NO	5 metre robotic cable	200 735 091F
Drag Chain		
I2 (Igus 15.2) drag chain		170 720 023
I3 (Igus 15.3) drag chain		170 720 025

To place an order for spare parts please telephone or fax your order to the Sales co-ordinator:

Tel: +44 (0)1268 287070
Fax: +44 (0)1268 293344

Appendices

CONTENTS

Appendix A

Glossary of Terms & Abbreviations

GLOSSARY OF TERMS

TERM	DESCRIPTION OF TERM
Peak force	Peak force is the force produced when the peak current is applied to the forcer. It is the product of Force constant (N/Apk) and Peak current (Apk). The forcer is not moving, there is no forced cooling and no additional heat-sinking. The duration of the peak force is thermally limited and is therefore only allowable for a period of 1 second.
Continuous stall force	Continuous stall force is the force produced when the continuous current is applied to the forcer. It is the product : Force constant (N/Apk) x Continuous stall current (Apk) or : Force constant (N/Arms) x Continuous stall current (Arms). The forcer is not moving and there is no forced cooling. It is quoted with and without the addition of a 25 x 25 x 2.5 cm heatsink plate mounted with thermal grease to the mounting surface of the forcer.
Peak current	Peak current is the current required to heat the forcer phases to their maximum operating temperature when the ambient temperature is 25°C, the forcer is not moving, there is no forced cooling and no additional heat-sinking. It is the maximum allowable current before demagnetisation of the magnets occurs when the magnet temperature is 100°C. The duration of the peak current is thermally limited and is therefore only allowable for a period of 1 second.
Continuous stall current	Continuous stall current is the current required to heat the forcer phases to their maximum operating temperature when the ambient temperature is 25°C, the forcer is not moving and there is no forced cooling. It is quoted with and without the addition of a 25 x 25 x 2.5 cm heatsink plate mounted with thermal grease to the mounting surface of the forcer.
Force constant	Force constant is the peak force produced when 1 ampere (peak) flows into one phase and 0.5 ampere (peak) flows out of the remaining two phases (as in sinusoidal commutation) quoted in N/Apk. Alternatively, it is the peak force produced when 0.707 ampere (rms) flows into one phase and 0.353 ampere (rms) flows out of the remaining two phases (again as in sinusoidal commutation) quoted in N/Arms.
Back EMF	Back EMF constant is the peak phase to phase voltage generated when the forcer is travelling at a velocity of 1m/s.
Fundamental forcer constant	Fundamental forcer constant is the continuous stall force divided by the square root of the power dissipated in the forcer at that continuous stall force.
Eddy current loss	Eddy current loss is the amount of opposing force produced by the forcer when it is travelling at a velocity of 1m/s.
Sleeve cogging force	Sleeve clogging force is the amount of force variation produced by having an iron sleeve. The variation is independent of forcer current.
Resistance	Resistance is measured phase to phase at temperatures of 25°C and 100°C.
Inductance	Inductance is measured phase to phase at a frequency of 1 kHz. The actual value of inductance varies as the forcer position varies so it is the minimum value that is quoted.
Electrical time constant	Electrical time constant is the time taken for a step current input to the forcer to reach 63.2% of its value.
Continuous working voltage	Continuous working voltage is the maximum allowable continuous voltage between any two forcer phases or between any forcer phase and the forcer safety earth.
Pole pitch	Pole pitch is the distance in millimetres for one complete electrical cycle (between like magnetic poles).

Power dissipation	Power dissipation is the maximum power that can be dissipated by the forcer when the forcer phases are at their maximum operating temperature, the ambient temperature is 25°C, the forcer is not moving and there is no forced cooling. It is quoted with and without the addition of a 25 x 25 x 2.5cm heatsink plate mounted with thermal grease to the mounting surface of the forcer.
Maximum phase temperature	Maximum phase temperature is the maximum operating temperature for the forcer phases. It is limited to provide a safe operating temperature for the magnets.
Rthphase-houslng	Rthphase-houslng is the temperature rise from the forcer housing to the forcer phases for an input power of 1 watt to the forcer. The forcer is not moving, there is no forced cooling and no additional heatsinking.
Rthhousing-ambient	Rthhousing-ambient is the temperature rise from ambient temperature to the forcer housing for an input power of 1 watt to the forcer. The forcer is not moving and there is no forced cooling. It is quoted with and without the addition of a 25 x 25 x 2.5cm heatsink plate mounted with thermal grease to the mounting surface of the forcer.
Thermal time constant	Thermal time constant is the time taken for the forcer phases to cool to 36.8% of the difference between forcer phase and ambient temperatures when there is no current flowing, the forcer is not moving there is no forced cooling and no additional heatsinking.

ABBREVIATIONS

The abbreviations used in this Guide are listed in the following table.

Apk	Ampere peak	PCB	Printed circuit board
Arms	Ampere root mean square	PUR	Polyurethane
AWG	American Wire Gauge	PVC	Poly Vinyl Chloride
COS	cosine	s	second
d.c.	direct current	SIN	sine
EMC	Electro-Magnetic Compatibility	TYP	Typical
EMF	Electro-Motive Force	UL	Underwriters Laboratory
kg	kilogramme	V	Volt
m	metre	Vpk	Volt peak
mA	milliampere	Vpk-pk	Volt peak to peak
mH	millihenry	Vrms	Volt root mean square
mm	millimetre	W	Watt
MTG	Mounting	°C degrees	Celsius
N	Newton	mm	micrometre (micron)
PTC	Positive Temperature Coefficient		

Appendix B

Troubleshooting

TROUBLESHOOTING CHART

Check to see if the problem you are experiencing is listed in the chart below. If the problem cannot be solved with reference to this chart, contact the customer services department.

Fault	Possible cause	Action
Forcer fails to move and produces no force.	1. Drive not powered. 2. Forcer phase connections not made. 3. Forcer over-temperature sensor not connected. 4. Forcer over-temperature.	1. Apply power to drive. 2. Check forcer phase connections on drive. 3. Check forcer over-temperature sensor connections on drive. 4. Allow forcer to cool.
Forcer fails to move but does produce force.	1. One or more forcer phase connections not made or made incorrectly. 2. One or more position sensor connections not made or made incorrectly. 3. Forcer/thrust rod mechanically blocked.	1. Check forcer phase connections on drive. 2. Check position sensor connections on drive. 3. Check forcer/thrust rod is free to move.
Forcer moves but is jerky in motion.	Incorrect pole pitch set up or phase offset between position sensor and forcer back emf.	Check drive or controller set up.
Forcer moves in wrong direction.	One or more position sensor and forcer phase connections made incorrectly.	Check position sensor and forcer phase connections on drive.

Appendix C

Technical Specifications

FORCER ELECTRICAL SPECIFICATIONS

FORCER TYPE	2504		2506		2508		2510		units
	S(1)	P(1)	S(1)	P(1)	S(1)	P(1)	S(1)	P(1)	
Peak force @ 25°C ambient for 1 sec	312	156	468	234	624	312	780	390	N
Peak current @ 25°C ambient for 1 sec	20								Apk
With 25 x 25 x2.5cm heatsink plate									
Continuous stall force @ 25°C ambient (2)	51.2		69.5		86.4		102.4		N
Continuous stall current @ 25°C ambient	2.31	4.62	2.10	4.20	1.96	3.92	1.86	3.72	Arms
	3.27	6.54	2.97	5.94	2.77	5.54	2.62	5.24	Apk
Without heatsink plate									
Continuous stall force @ 25°C ambient (2)	42.5		59.5		75.1		90.0		N
Continuous stall current @ 25°C ambient	1.92	3.84	1.80	3.60	1.70	3.40	1.63	3.26	Arms
	2.72	5.44	2.54	5.08	2.41	4.82	2.31	4.62	Apk
Force constant (sine commutation)	22.1	11.0	33.1	16.5	44.1	22.0	55.2	27.6	N/Arms
	15.6	7.8	23.4	11.7	31.2	15.6	39.0	19.5	N/Apk
Back EMF constant (phase to phase)	18.0	9.0	27.0	13.5	36.0	18.0	45.0	22.5	Vpk/m/s
Fundamental forcer constant	6.47		7.92		9.13		10.24		N/√W
Eddy current loss	9.51		12.55		15.58		18.61		N/m/s
Resistance @ 25°C (phase to phase)	6.02	1.50	9.02	2.25	12.03	3.01	15.04	3.76	Ohm
Resistance @ 100°C (phase to phase)	7.75	1.94	11.63	2.91	15.51	3.88	19.39	4.85	Ohm
Inductance @ 1kHz (phase to phase)	3.90	0.97	5.85	1.46	7.80	1.95	9.75	2.44	mH
Electrical time constant	0.65								ms
Maximum working voltage	380								V d.c.
Pole pitch (one electrical cycle)	51.2								mm
Peak acceleration (3)	222	111	222	111	235	117	255	127	m/s^2
Maximum speed (4)	8.5	7.3	6.4	7.1	5.3	7.3	4.5	6.7	m/s

FORCER ELECTRICAL SPECIFICATIONS (CONTINUED)

FORCER TYPE	3804		3806		3808		3810		units
	S(1)	P(1)	S(1)	P(1)	S(1)	P(1)	S(1)	P(1)	
Peak force @ 25°C ambient for 1 sec	744	372	1116	558	1488	744	1860	930	N
Peak current @ 25°C ambient for 1 sec	20								Apk
With 25 x 25 x2.5cm heatsink plate									
Continuous stall force @ 25°C ambient (2)	137.3		186.9		232.1		276.2		N
Continuous stall current @ 25°C ambient	2.61	5.23	2.37	4.74	2.20	4.41	2.10	4.20	Arms
	3.69	7.39	3.35	6.71	3.12	6.23	2.97	5.94	Apk
Without heatsink plate									
Continuous stall force @ 25°C ambient (2)	120.1		168.2		212.7		255.0		N
Continuous stall current @ 25°C ambient	2.28	4.57	2.13	4.27	2.02	4.04	1.94	3.88	Arms
	3.23	6.46	3.01	6.03	2.86	5.72	2.74	5.49	Apk
Force constant (sine commutation)	52.6	26.3	78.9	39.4	105.2	52.6	131.5	65.7	N/Arms
	37.2	18.6	55.8	27.9	74.4	37.2	93.0	46.5	N/Apk
Back EMF constant (phase to phase)	43.0	21.5	64.4	32.2	85.9	42.9	107.4	53.7	Vpk/m/s
Fundamental forcer constant	14.54		17.80		20.56		22.99		N/√W
Eddy current loss	3.7		3.7		3.7		3.7		N/m/s
Sleeve cogging force	7.3		4.2		8.3		5.6		+/-N
Resistance @ 25°C (phase to phase)	6.77	1.69	10.16	2.54	13.54	3.38	16.93	4.23	Ohm
Resistance @ 100°C (phase to phase)	8.73	2.18	13.10	3.27	17.45	4.36	21.82	5.45	Ohm
Inductance @ 1kHz (phase to phase)	8.52	2.13	12.78	3.19	17.04	4.26	21.30	5.32	mH
Electrical time constant	1.26								ms
Maximum working voltage	380								V d.c.
Pole pitch (one electrical cycle)	71.2								mm
Peak acceleration (3)	243	121	275	137	294	147	307	153	m/s^2
Maximum speed (4)	5.9	8.7	4.2	7.1	3.3	5.8	2.6	4.9	m/s

Notes: -

(1) S=series forcer phases, P=parallel forcer phases
(2) Reduce continuous stall force to 89% at 40°C ambient
(3) Based on a moving forcer with to payload
(4) Based on a moving forcer with triangular move over maximum stroke and no payload

FORCER THERMAL SPECIFICATIONS

FORCER TYPE	2504	2506	2508	2510	3804	3806	3808	3810	units
Maximum phase temperature	100								°C
Thermal resistance $Rth_{phase\text{-}housing}$	0.41	0.27	0.20	0.16	0.23	0.16	0.13	0.11	°C/Watt
With 25 x 25 x2.5cm heatsink plate									
Power dissipation @ 25°C ambient	62.3	77.0	89.2	100.2	89.3	110.3	127.1	144.2	Watt
Thermal resistance $Rth_{housing\text{-}ambient}$	0.79	0.69	0.64	0.59	0.61	0.52	0.46	0.41	°C/Watt
Without heatsink plate									
Power dissipation @ 25°C ambient	43.1	56.4	67.6	77.3	68.2	89.3	107.0	123.0	Watt
Thermal resistance $Rth_{housing\text{-}ambient}$	1.33	1.06	0.91	0.81	0.87	0.68	0.57	0.50	°C/Watt
Thermal time constant	1188	1276	1377	1486	1677	1798	1924	2056	s

FORCER MECHANICAL SPECIFICATIONS

FORCER TYPE	2504	2506	2508	2510	3804	3806	3808	3810	units
Maximum stroke	1151	1100	1049	998	1323	1252	1181	1110	mm
Moving mass	1.40	2.10	2.65	3.05	3.05	4.05	5.05	6.05	kg
Maximum normal force, Fn (1) (3)	1.05	2.11							kN
Maximum side force, Fs (1)									
Maximum roll moment, Mr (1)	17.8	35.6							Nm
Maximum pitch moment, Mp (1)	6.4	112	158	212	103	172	238	313	Nm
Maximum yaw moment, My (1)									
Maximum normal force, Fn (2) (3)	0.49	0.98							kN
Maximum side force, Fs (2)									
Maximum roll moment, Mr (2)	8.2	16.4							Nm
Maximum pitch moment, Mp (2)	2.9	52	73	98	48	79	110	145	Nm
Maximum yaw moment, My (2)									
Constrained vertical straightness (flatness)	60								µm/m
Constrained horizontal straightness	80								µm/m
Unconstrained vertical straightness (flatness)	100								µm/m
Unconstrained horizontal straightness	80								µm/m

Notes

(1) For a bearing life expectancy of 10000 km with no other forces or moments

(2) For a bearing life expectancy of 100000 km with no other forces or moments

(3) Load in kg = force/9.81

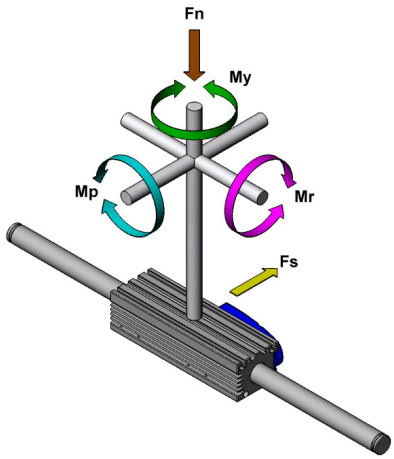

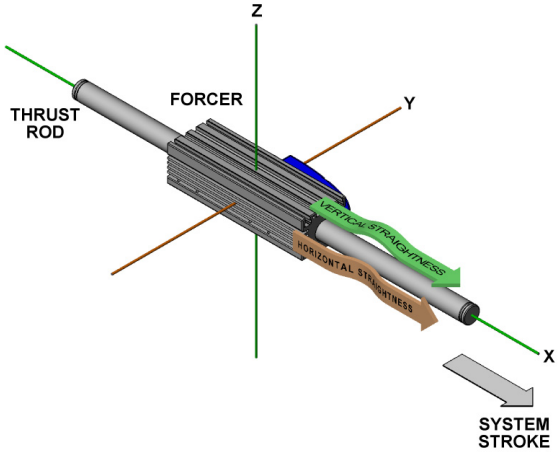

FEEDBACK

The ServoTube Module is available with three feedback options with option S supplied as standard.

Option S feedback outputs analogue, differential sine and cosine signals for providing position feedback. Shown below are the relationships between forcer phase back EMF and position sensor outputs for one direction of motion (as shown by arrows). It should be noted that +SIN or -SIN is always in phase with forcer phase U. For the motion shown, -SIN is in phase with forcer phase U. For motion in the opposing direction +SIN is in phase with forcer phase U.

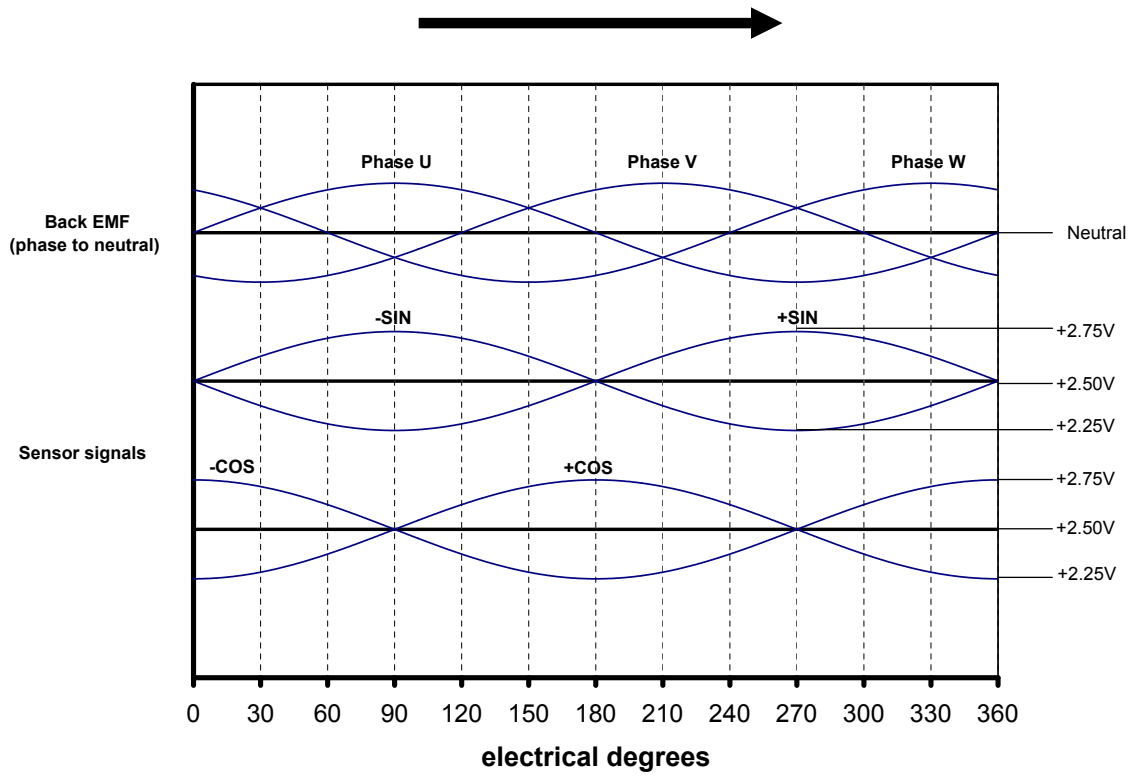

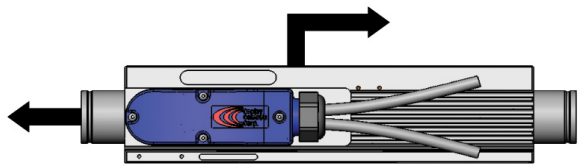

OPTION S SPECIFICATION	Sx25	Xx38	Units
Output signal period	51.2	71.2	mm
Signal amplitude (between +/- signals)	1		Vpk-pk
Output current	± 10		mA
Supply voltage	5 ± 0.25		Vd.c.
Supply current (output current=0)	15 ± 5		mA
Resolution(1)	12	20	µm
Position repeatability(2)	± 12	± 25	µm
Absolute accuracy(3)	± 350	± 400	µm

SPECIFICATION	OPTION C	OPTION D	UNITS
Signal output	EIA RS422A		-
Supply voltage	5 ± 0.25		Vd.c.
Supply current (output current=0)	120		mA
Supply current (outputs terminated with 120R)	195		mA
Resolution	1	5	µm
Position repeatability(1)	± 1	± 5	µm
Absolute accuracy(3)	± 10	± 10	µm

Notes

(1) Dependent on amplifier

(2) Dependent on amplifier. Under constant operating conditions. Self-heating of the forcer will cause expansion in the thrust rod during the initial warm up period. In high duty applications (corresponding to an internal forcer temperature of 80°C) a 1 metre thrust rod will expand typically by 250 µm.

(3) Maximum error over 1 metre under constant operating conditions.

FORCER OVER-TEMPERATURE SENSOR

SPECIFICATION	VALUE	UNITS
Resistance in the temperature range -20°C to + 70°C	60 to 750	Ohms
Resistance at 85°C	≤1650	Ohms
Resistance at 95°C	≥3990	Ohms
Resistance at 105°C	≥12000	Ohms
Maximum continuous voltage	30	Vd.c.

CABLES

SPECIFICATION	POWER	SENSOR
Overall diameter (nominal)	7.6mm	5.8mm
Outer jacket material	PUR	PUR
Number of conductors	4	4 x twisted pair
Size of conductors	1.5mm^2 (16 AWG)	0.14mm^2 (26AWG)
Screened / Unscreened	Screened	Screened
Minimum bending radius - flexible routing	38mm	44mm
Operating temperature - flexible routing	-40°C to +80°C	-40°C to +90°C
Operating temperature - flxed routing	-40°C to +80°C	-50°C to +90°C

LIMIT SWITCHES

If required, the ServoTube Module can be supplied with limit switches.

There are two types available, NPN output and PNP output. Each output type is available with 2 metres of standard cable for non-flexing applications or 5 metres of cable suitable for continuous flexing.

Each limit switch position is adjustable and switching is achieved by an actuator vane mounted on the forcer. Electrical connections are made via wire ends stripped and solder tinned ready for termination.

SPECIFICATION	VALUE			
	minimum	typical	maximum	units
Supply voltage	10	24	30	Vd.c.
Supply current	-	15	-	mA
Sink current	-	-	100	mA
“closed” voltage	-	-	1	Vd.c.
Frequency response	-	-	600	Hz

DRAG CHAIN

The ServoTube module is available with two sizes of drag chain. **Option 2** is standard and provides Igus size 15.2 drag chain while **Option 3** provides Igus size 15.3

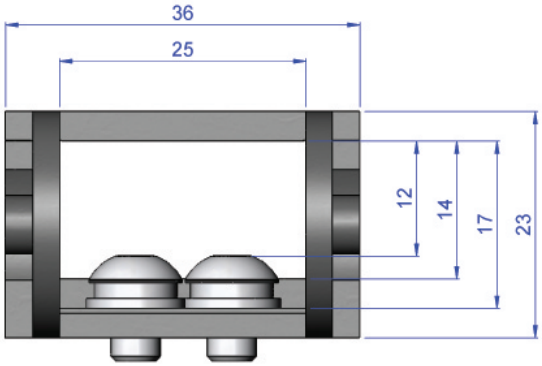

Option 1

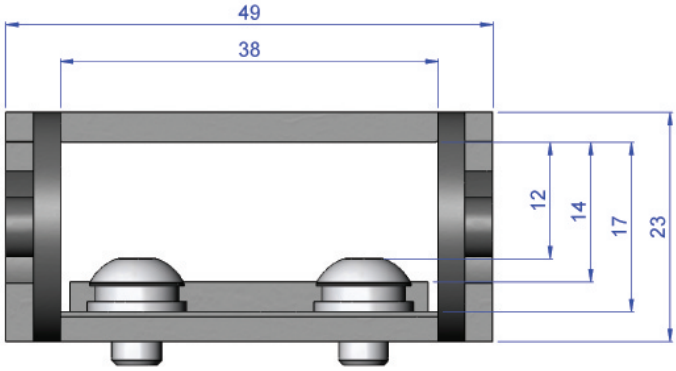

Option 2

ENVIRONMENT

The ServoTube Module is intended for use in an environment within the following conditions:

SPECIFICATION	VALUE
Operating temperature	0°C to +40°C
Storage temperature	-20°C to +70°C
Altitude (above mean sea level)	1000m
Overvoltage category	II
Pollution degree	2
EMC	light industrial

Copley Controls Corp.

Copley Motion Systems LLC

Luckyn Lane, Pipps Hill, Basildon, Essex SS14 3BW England

Tel: +44 (0)1268 287070 Fax +44 (0)1268 293344

Ref: UM03016/A